NOTES:

REVISIONS			
REV.	DESCRIPTION	DATE	APPROVED
A	ECR 8000005792: REL TO PRODUCTION PER EAO 602362.	26JAN15 YMH	PL.TANG / LIGWU
B	ECR 8000007318: UPDATE DRAWING.	20MAR15 YMH	PL.TANG / LIGWU
C	ECR 8000010361: ADD SBNHH-1D45C-SR.	24SEP15 CZH	S.LIU/JIHE

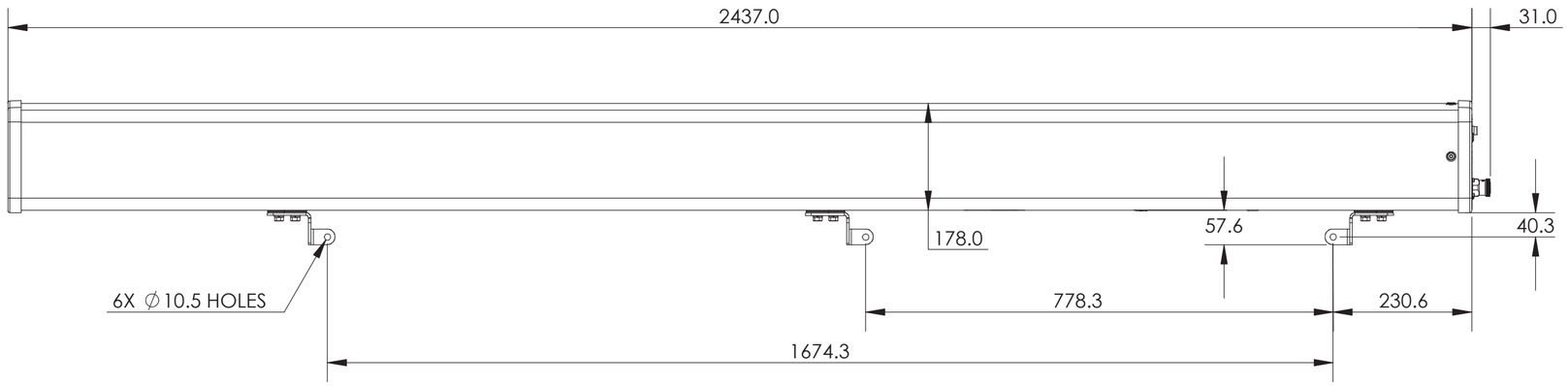

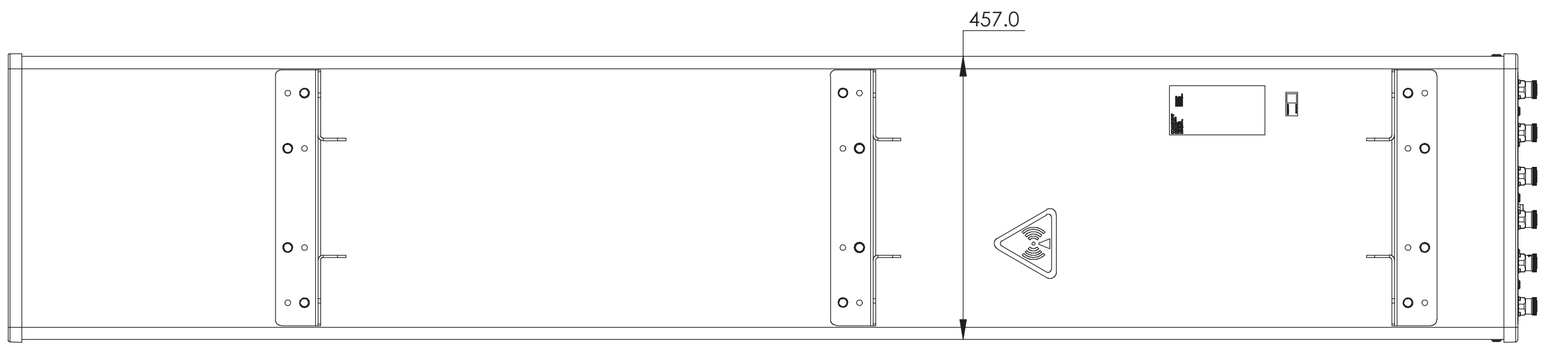

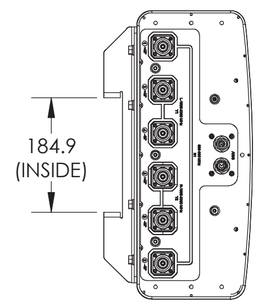

SBNHH-1D45C
SBNHH-1D45C-SR

COMMSCOPE, INC. OF NORTH CAROLINA

DENSITY:
MASS:
VOLUME:
SURFACE AREA:

TOLERANCES
0 PLACE X ±
1 PLACE .X ±
2 PLACE .XX ±
ANGLES ±

SAP MATERIAL MASTER

FINISH
N/A

MATERIAL
N/A

UNLESS OTHERWISE SPECIFIED DIMENSIONS ARE IN MILLIMETERS INTERPRETED PER ISO STANDARDS HANDBOOK TECHNICAL DRAWINGS, VOLUMES 1 & 2, THIRD EDITION (2002)

	NAME	DATE
CE	YMH	26JAN15
RW	ZHHCHEN	09/23/2015
RV	CHALIU	09/27/2015
AD	JIHE	09/27/2015
RE	BYUAN	09/28/2015
ECN	8000010361-O	

TITLE
PRODUCT DRAWING

SIZE A2 | SCALE 1:5 | DOCUMENT NO. SBNHH-1D45C-L

HEIGHT		ALL SURFACES	WORK AREA 23	MODEL			DRAWING			SHEET
LENGTH				VERSION	STATUS	REVISION	VERSION	STATUS	REVISION	
WIDTH		√		03	RE	D	02	RE	C	1 OF 1

© 2015 CommScope, Inc.

NOTICE: These drawings and specifications are the proprietary property of COMMSCOPE, INC. and may be used only for the specific purpose authorized in writing by COMMSCOPE, INC.