NOTES:

1.0 ALL METRIC DIMENSIONS ARE IN BRACKETS.

REVISIONS				
REV.	ECN	DESCRIPTION	BY	DATE
A	8000028694	INITIAL RELEASE	MRC	03/01/18

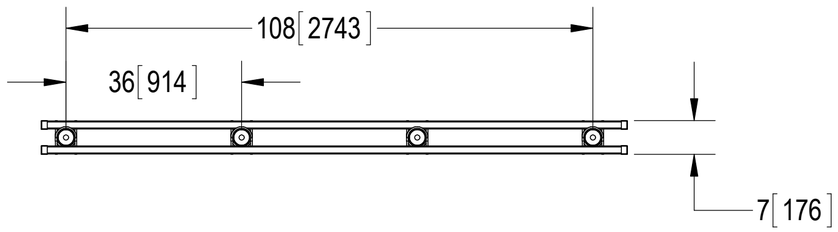

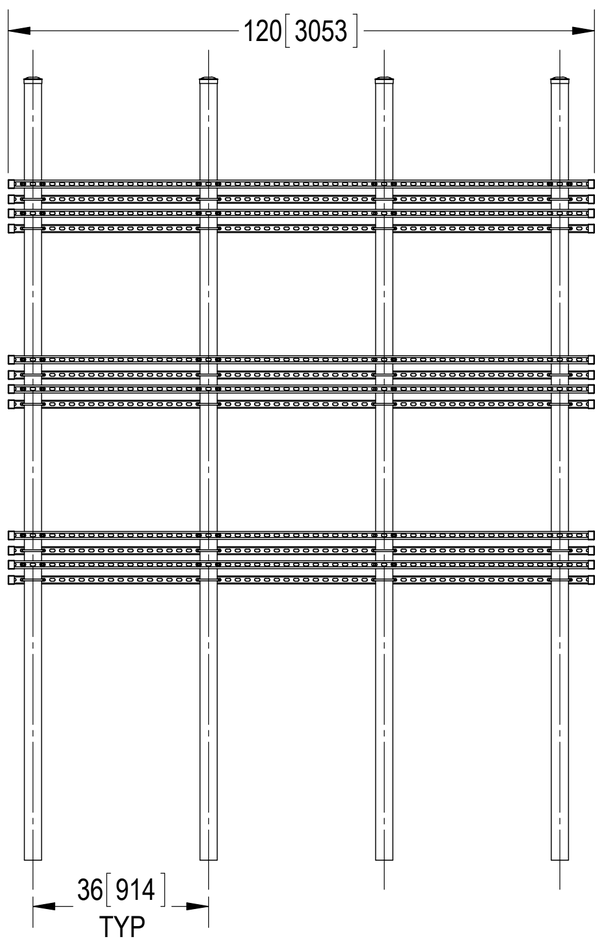

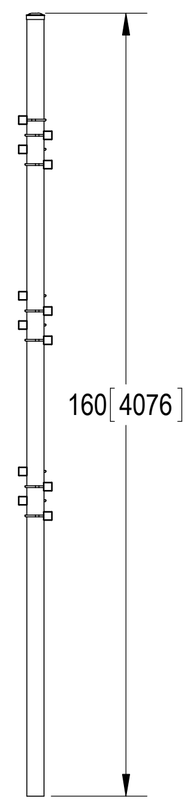

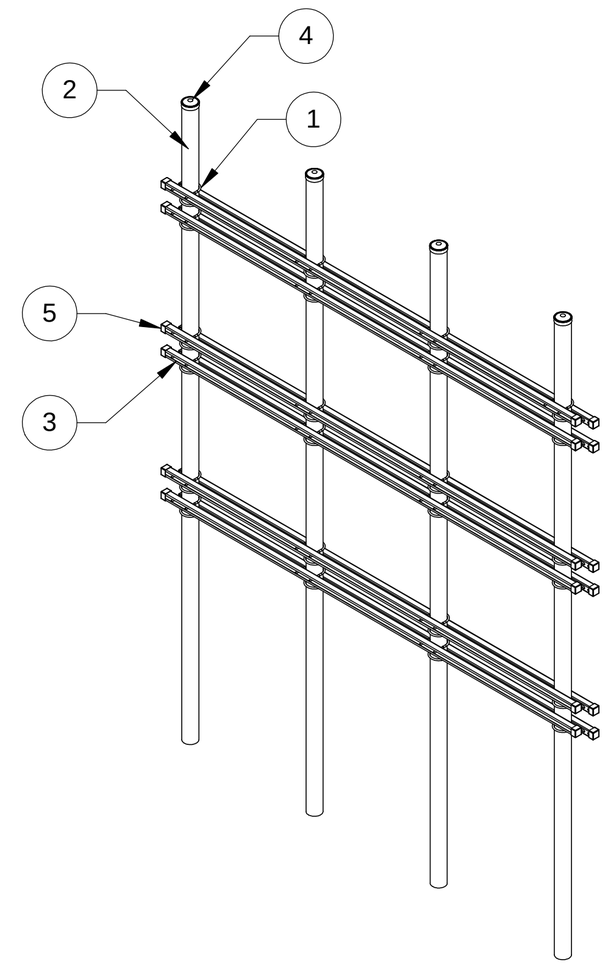

ITEM	PART NO.	DESCRIPTION	QTY.	WEIGHT	NOTE NO.
1	GUB-3355	3/8" X 3-5/8" X 5-1/4" GALV U-BOLT	48	0.40 LBS	
2	MF130165	3-1/2" O.D. X 160" L SCH 40 PIPE	4	78.64 LBS	
3	MT-504	SQUARE SUPPORT RAIL, 12 GA, SLOTTED, 120"	12	20.35 LBS	
4	PC-034	∅3½" PIPE CAP	4	0.54 LBS	
5	PTCR01	END CAP	24	0.05 LBS	

COMMSCOPE, INC. OF NORTH CAROLINA

TOLERANCES

0 PLACE X ± .25 | 2 PLACE .XX ± .06

1 PLACE .X ± .12 | ANGLES ± 2°

SAP MATERIAL MASTER: **MTC4015120H**

FINISH: GALV A123

MATERIAL: A500, A568

UNLESS OTHERWISE SPECIFIED DIMENSIONS ARE IN MILLIMETERS INTERPRET PER ISO STANDARDS HANDBOOK, TECHNICAL DRAWINGS, VOLUMES 1 & 2, THIRD EDITION (2002)

	NAME	DATE
CE	MRC	11/14/17
RW		
RV		
AD		
RE	TP	11/14/17
ECN	8000028694	

TITLE: **H-FRAME, 4 POSTS, 12 UNISTRUT**

SCALE: **1:24**

DOCUMENT NO.: **MTC4015120H**

DENSITY	0.28	lbs/in³
MASS	584.46	lbs
VOLUME	2075.96	in³
SURFACE AREA		in²
HEIGHT		
LENGTH		
WIDTH		

SIZE	WORK AREA	MODEL VERSION	MODEL STATUS	MODEL REVISION	DRAWING VERSION	DRAWING STATUS	DRAWING REVISION	SHEET
C							A	1 OF 1

© 2015 CommScope, Inc. Confidential