LNX003U-V2

H\V Pol Omni Antenna, 2490–2690 MHz, 360° horizontal beamwidth

General Specifications

Antenna Type	Omni
Band	Single band
Grounding Type	RF connector body grounded to mounting interface
Performance Note	Outdoor usage
Radome Material	Fiberglass, UV resistant
Radiator Material	Brass
RF Connector Interface	4.3-10 Female
RF Connector Location	Bottom
RF Connector Quantity, high band	2
RF Connector Quantity, total	2

Dimensions

Length	754 mm | 29.685 in
Net Weight, without mounting kit	2.1 kg | 4.63 lb
Outer Diameter	44 mm | 1.732 in

Mounting Hole Pattern

©2024 CommScope, Inc. All rights reserved. CommScope and the CommScope logo are registered trademarks of CommScope and/or its affiliates in the U.S. and other countries. For additional trademark information see https://www.commscope.com/trademarks. All product names, trademarks and registered trademarks are property of their respective owners. Revised: September 9, 2024

LNX003U-V2

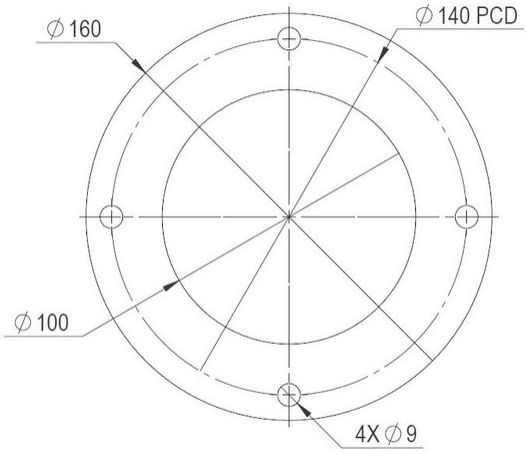

Electrical Specifications

Impedance	50 ohm
Operating Frequency Band	2490 – 2690 MHz
Polarization	Horizontal | Vertical

Electrical Specifications

Frequency Band, MHz	**2490–2690**
Gain, dBi	6.8
Beamwidth, Horizontal, degrees	360
Beamwidth, Vertical, degrees	19.8
Beam Tilt, degrees	0
USLS, typical, dB	10
Isolation, Cross Polarization, dB	30
VSWR | Return loss, dB	1.5 | 14.0
PIM, 3rd Order, 2 x 20 W, dBc	-150
Input Power per Port, maximum, watts	100

Mechanical Specifications

Wind Loading @ Velocity, frontal	33.0 N @ 150 km/h (7.4 lbf @ 150 km/h)
Wind Speed, maximum	241 km/h (150 mph)

©2024 CommScope, Inc. All rights reserved. CommScope and the CommScope logo are registered trademarks of CommScope and/or its affiliates in the U.S. and other countries. For additional trademark information see https://www.commscope.com/trademarks. All product names, trademarks and registered trademarks are property of their respective owners. Revised: September 9, 2024

Packaging and Weights

Width, packed	255 mm | 10.039 in
Depth, packed	235 mm | 9.252 in
Length, packed	845 mm | 33.268 in
Weight, gross	4.2 kg | 9.259 lb

Regulatory Compliance/Certifications

Agency	Classification
CE	Compliant with the relevant CE product directives
ISO 9001:2015	Designed, manufactured and/or distributed under this quality management system

* Footnotes

Performance Note	Severe environmental conditions may degrade optimum performance

©2024 CommScope, Inc. All rights reserved. CommScope and the CommScope logo are registered trademarks of CommScope and/or its affiliates in the U.S. and other countries. For additional trademark information see https://www.commscope.com/trademarks. All product names, trademarks and registered trademarks are property of their respective owners. Revised: September 9, 2024