THIS DRAWING IS UNPUBLISHED. RELEASED FOR PUBLICATION -,- .
© 2016 Commscope, INC. Confidential NOTICE: These drawings and specifications are the proprietary property of COMMSCOPE, INC. and may be used only for the specific purpose authorized in writing by COMMSCOPE, INC.

REVISIONS

P	LTR	DESCRIPTION	DATE	DWN	APVD
	A	REV; MCO – 40027764MCO	11JAN2016	—	HG / RA
	B	REV PER BNS_CD_BRAND	10MAR2017	GG	DC

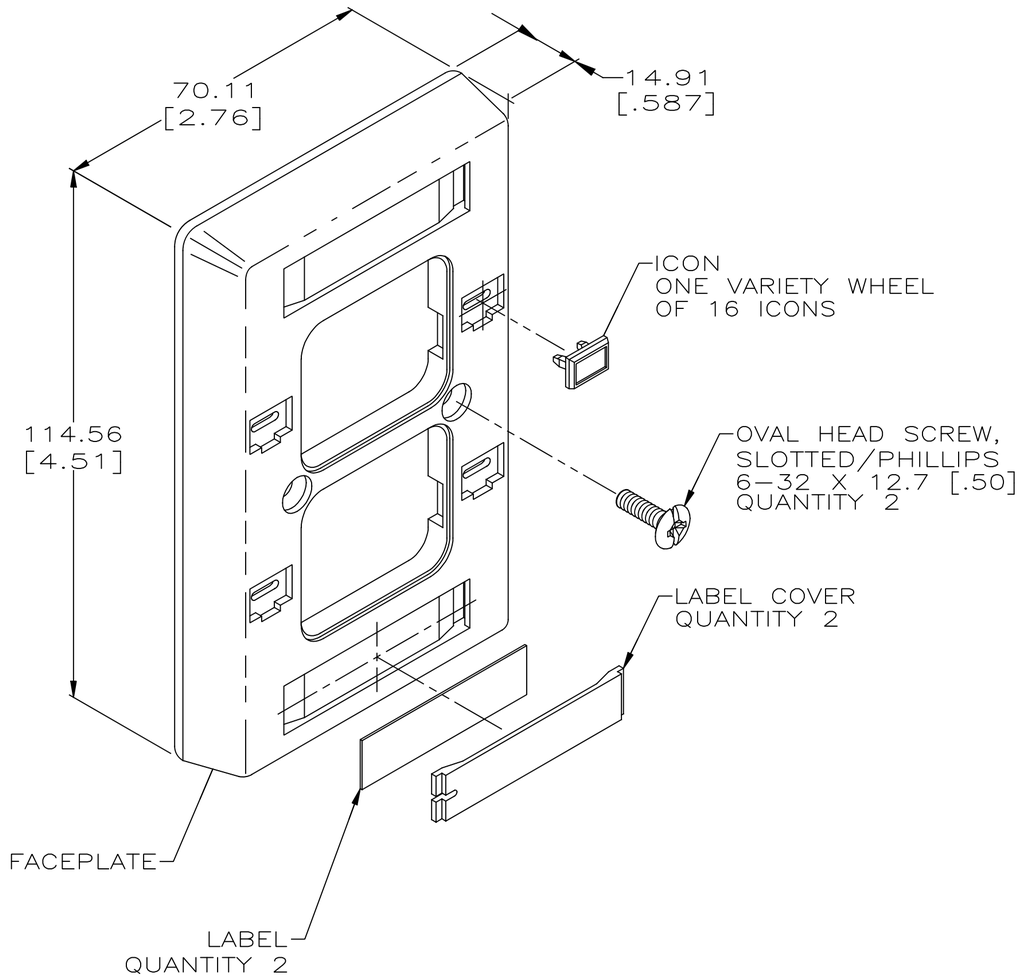

1. DIMENSIONS ARE MAXIMUM UNLESS OTHERWISE SPECIFIED.

2. MATERIAL: FACEPLATE–ABS MOLDING COMPOUND. SEE TABLE FOR COLOR.
ICON–ABS MOLDING COMPOUND.
SCREWS–ZINC PLATED CARBON STEEL.
LABEL COVER–POLYCARBONATE MOLDING COMPOUND, CLEAR.
LABEL–WHITE INDEX PAPER.

3. KIT SHIPPED NOT ASSEMBLED.

ELECTRIC IVORY	558510–6
WHITE	558510–5
BLACK	558510–3
LIGHT ALMOND	558510–1

THIS DRAWING IS A CONTROLLED DOCUMENT.

DIMENSIONS: mm [INCHES]

TOLERANCES UNLESS OTHERWISE SPECIFIED:
0 PLC ± –
1 PLC ± –
2 PLC ± –
3 PLC ± –
4 PLC ± –
ANGLES ± –

MATERIAL 2

FINISH 2

DWN 2–18–94 D. STRAUSSER
CHK 3–7–94 B.FOX
APVD 3–7–94 D. BECK 3–7–94 J. SCHLUNZ
PRODUCT SPEC —
APPLICATION SPEC —
WEIGHT —
CUSTOMER DRAWING

COMMSCOPE, INC.

NAME: FACEPLATE KIT, SINGLE GANG W/ ICONS AND LABELS, AMP COMMUNICATION OUTLET

SIZE A2 | CAGE CODE – | DRAWING NO C–558510 | RESTRICTED TO —

SCALE 1:1 | SHEET 1 OF 1 | REV B

558510