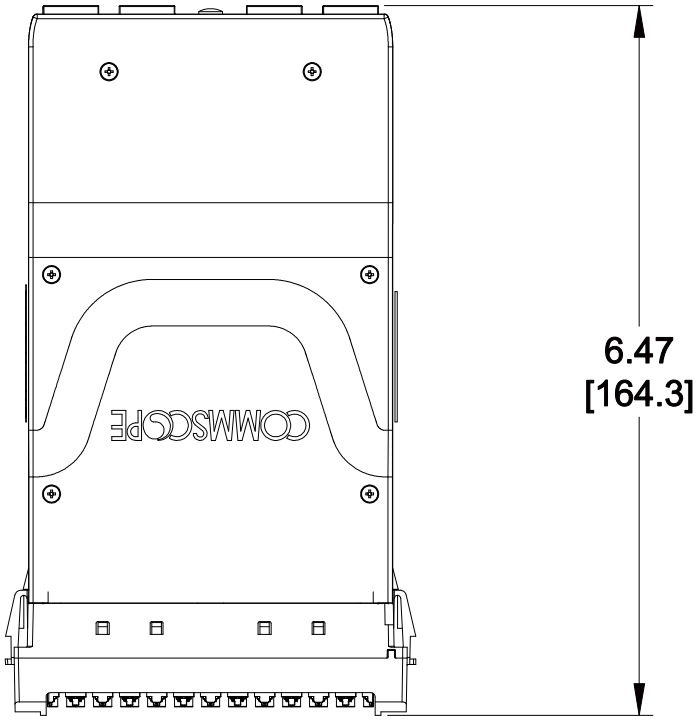

MATERIAL ID	DESCRIPTION
760188623	InstaPATCH® 360 TS TAP MODULE, 30:70 SINGLEMODE, 24 LC PORTS

NOTES:

1. SEE SYSTIMAX CATALOG FOR PART NUMBER SUFFIXES TO INDICATE COLOR/PKG.
2. SEE SYSTIMAX CATALOG FOR COMPLETE LIST OF PARTS RELATED TO THE USE OF THIS PRODUCT.
3. DIMENSIONS ARE IN INCHES[MM].
4. PART INCLUDES:
   (1) 30:70 SM TAP, 24 FIBER MODULE ASSEMBY

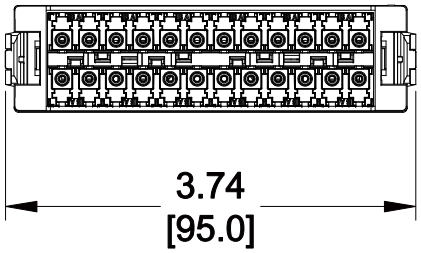

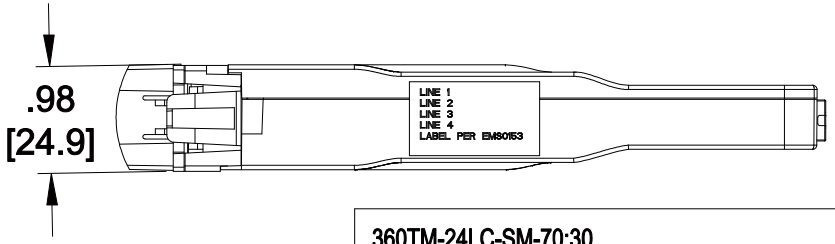

360TM-24LC-SM-70:30

COMMSCOPE, INC OF NORTH CAROLINA

SYSTIMAX® SOLUTIONS

REV	DATE	ECR	DESCRIPTION	APPROVED BY	DRAWN BY DJ		DWG NO
1	4/09/14		INITIAL ISSUE	CTC	DATE 4/09/2014		760188623

© 2013CommScope, Inc. All Rights Reserved