USED ON —

DWG NO 1427437

THIS DRAWING IS A CONTROLLED DOCUMENT.

1 OPTICAL FIBER SPECIFICATIONS:

PART NUMBER	FIBER TYPE	CABLE TYPE	ATTENUATION db/km					OFL BANDWIDTH MHz–Km	
				850nm	1300nm	1310nm	1550nm	850nm	1300nm
X–1427437–1	62.5/125	OM1	MAXIMUM	3.5	1.5	N/A	N/A	200	600
X–1427437–2	50/125	OM2	MAXIMUM	3.5	1.5	N/A	N/A	500	500
X–1427437–3	50/125	OM3	MAXIMUM	3.5	1.5	N/A	N/A	1500	500
X–1427437–4	SM,G652D	OS2	MAXIMUM	N/A	NA	0.36	0.23	N/A	N/A
X–1427437–5	50/125	OM4	MAXIMUM	3.5	1.5	N/A	N/A	3500	500

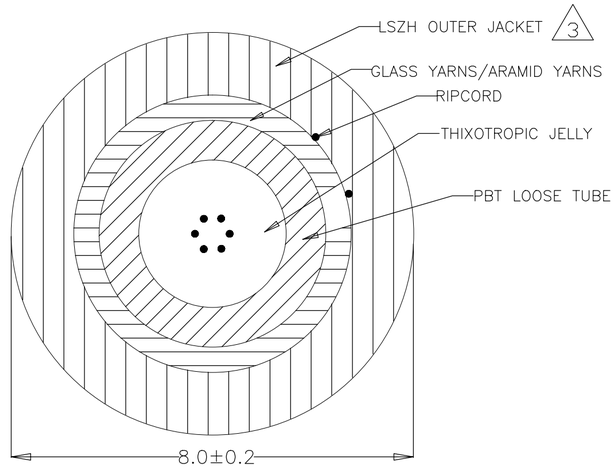

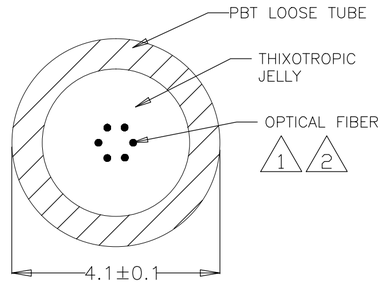

2 OPTICAL FIBERS TO BE COLOR–CODED BLUE, ORANGE, GREEN, BROWN, GREY, WHITE PER TIA/EIA 598A.

1 7 5 6

COMMSCOPE 8mm INDOOR/OUTDOOR OPTICAL CABLE X–1427437–Y 6F [Fiber type] LSZH [Batch code] MM/YY XXXX (M)

3 CABLE OUTER JACKET:
- A. OUTER JACKET MATERIAL TO BE LSZH.
- B. JACKET COLOR TO BE BLACK.

4 RATINGS:
- A. STORAGE TEMPERATURE: –40°C TO +70°C
- B. OPERATING TEMPERATURE: –20°C TO +70°C
- C. INSTALLATION TEMPERATURE: –10°C TO +60°C
- D. MAXIMUM INSTALLATION TENSILE STRENGTH: 1800 N
- E. MAXIMUM OPERATION TENSILE STRENGTH: 800 N
- F. MINIMUM BEND RADIUS AT INSTALLATION: 20 TIMES CABLE DIAMETER
- G. MINIMUM BEND RADIUS, UNLOADED: 10 TIMES CABLE DIAMETER
- H. CRUSH RESISTANCE: 1000 N/10cm
- I. CABLE WEIGHT: 73 KG/KM NOMINAL

5 MM/YY MONTH/YEAR – EXAMPLE: 06/16

6 XXXXX – SEQUENTIAL METER MARKING
TOLERANCE ON LENGTH MARKINGS: –0%/+10%

7 FIBER–CABLE TYPE–– "SM–OS2" FOR SINGLE MODE,
"50/125–OM2","62.5/125–OM1", "50/125–OM3", "50/125–OM4" FOR MULTIMODE.

8 PRINT LEGEND ACCORDING 101–131550 METHOD A, LEGEND TO BE REPEATED EVERY METER IN INDENTED WHITE INK.

PART NUMBER LIST				
8–1427437–5	3–1427437–5	2–1427437–5	1–1427437–5	50/125–OM4
8–1427437–4	3–1427437–4	2–1427437–4	1–1427437–4	SM–OS2
8–1427437–3	3–1427437–3	2–1427437–3	1–1427437–3	50/125–OM3
8–1427437–2	3–1427437–2	2–1427437–2	1–1427437–2	50/125–OM2
8–1427437–1	3–1427437–1	2–1427437–1	1–1427437–1	62.5/125–OM1
CUT LENGTH	3000M	2000M	1000M	FIBER–CABLE TYPE
PACKAGED LENGTH				

P	LTR	REVISION RECORD	DATE	DWN	APVD
	D	40031180MCO	6JUN16	M.D	T.V

DIMENSIONS: mm

TOLERANCES UNLESS OTHERWISE SPECIFIED:
0 PLC ± –
1 PLC ± –
2 PLC ± –
3 PLC ± –
4 PLC ± –
ANGLES ± –
SURFACE TEXTURE –√

DWN ENIACAR XU 07SEP2010
CHK –
APVD RICKY CHEN 07SEP2010

MATERIAL – –
HEAT TREAT – –

COMMSCOPE, INC.

NAME CABLE, FIBER OPTIC, INDOOR/OUTDOOR, LOOSE TUBE, LSZH, 6 FIBERS

SCALE – SIZE A2 DRAWING NO 1427437 SHEET 1 OF 1 REV D

©2016, Commscope, INC. Confidential
NOTICE: These drawings and specifications are the proprietary property of COMMSCOPE, INC. and may be used only for the specific purpose authorized in writing by COMMSCOPE, INC.