SS-2FB2550

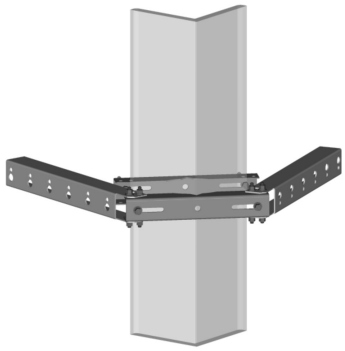

Star Support Face Bracket, dual, for 1-1/2 in to 5-9/16 in OD round members and 2-1/2 in to 5 in angle members

Product Classification

Product Type	Star Support Bracket

General Specifications

Cable Runs, quantity	12
Hole, quantity	12
Mounting	Angle members, 63.5–127 mm (2-1/2 in to 5 in) | Round member, 38.1–141.29 mm (1-1/2 in to 5-9/16 in) OD

Dimensions

Height	101.6 mm | 4 in
Width	304.8 mm | 12 in
Length	254 mm | 10 in
Mounting Diameter 2, maximum	127 mm | 5 in
Mounting Diameter 2, minimum	63.5 mm | 2.5 in
Mounting Diameter, maximum	142.24 mm | 5.6 in
Mounting Diameter, minimum	38.1 mm | 1.5 in
Hole Size	3/4 in | 7/16 in

©2024 CommScope, Inc. All rights reserved. CommScope and the CommScope logo are registered trademarks of CommScope and/or its affiliates in the U.S. and other countries. For additional trademark information see https://www.commscope.com/trademarks. All product names, trademarks and registered trademarks are property of their respective owners. Revised: August 20, 2024

SS-2FB2550

Outline Drawing

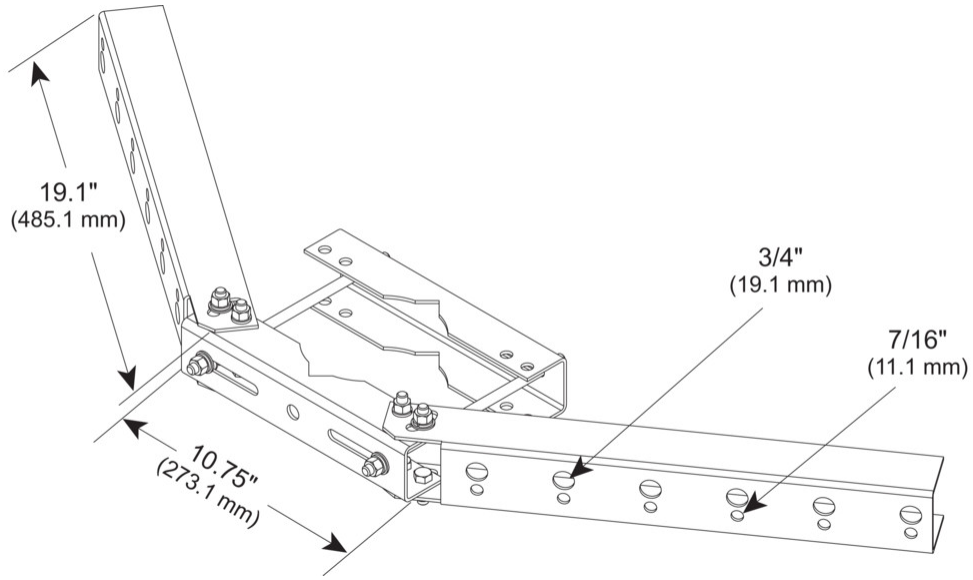

Material Specifications

Material Type	Hot dip galvanized steel

Packaging and Weights

Included	Brackets
Packaging quantity	1
Weight, net	5 kg | 11.023 lb

Regulatory Compliance/Certifications

Agency	**Classification**
ISO 9001:2015	Designed, manufactured and/or distributed under this quality management system
REACH-SVHC	Compliant as per SVHC revision on www.commscope.com/ProductCompliance
ROHS	Compliant
UK-ROHS	Compliant

Included Products

SS-FB – Star Support Face Bracket

©2024 CommScope, Inc. All rights reserved. CommScope and the CommScope logo are registered trademarks of CommScope and/or its affiliates in the U.S. and other countries. For additional trademark information see https://www.commscope.com/trademarks. All product names, trademarks and registered trademarks are property of their respective owners. Revised: August 20, 2024