CM-606-72

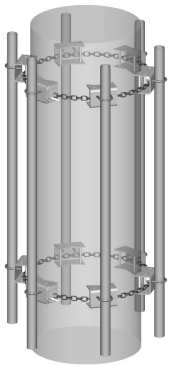

Chain Mount Kit, 16 ft chain, includes pipe

OBSOLETE

Product Classification

Product Type	Chain mount kit

General Specifications

Chains, quantity	2
Pipe, quantity	6
Sectors, quantity	6

Dimensions

Height	152.4 mm | 6 in
Width	203.2 mm | 8 in
Length	1,828.8 mm | 72 in
Chain Length	4,902.2 mm | 193 in
Pipe Length	1,828.8 mm | 72 in
Mounting Diameter, maximum	1524 mm | 60 in
Mounting Diameter, minimum	355.6 mm | 14 in
Pipe Outer Diameter	60.96 mm | 2.4 in
Mounting Circumference, maximum	4,775.2 mm | 188 in
Mounting Circumference, minimum	1,117.6 mm | 44 in

©2023 CommScope, Inc. All rights reserved. All trademarks identified by ® or ™ are registered trademarks, respectively, of CommScope. All specifications are subject to change without notice. See www.commscope.com for the most current information. Revised: March 23, 2023

CM-606-72

Outline Drawing

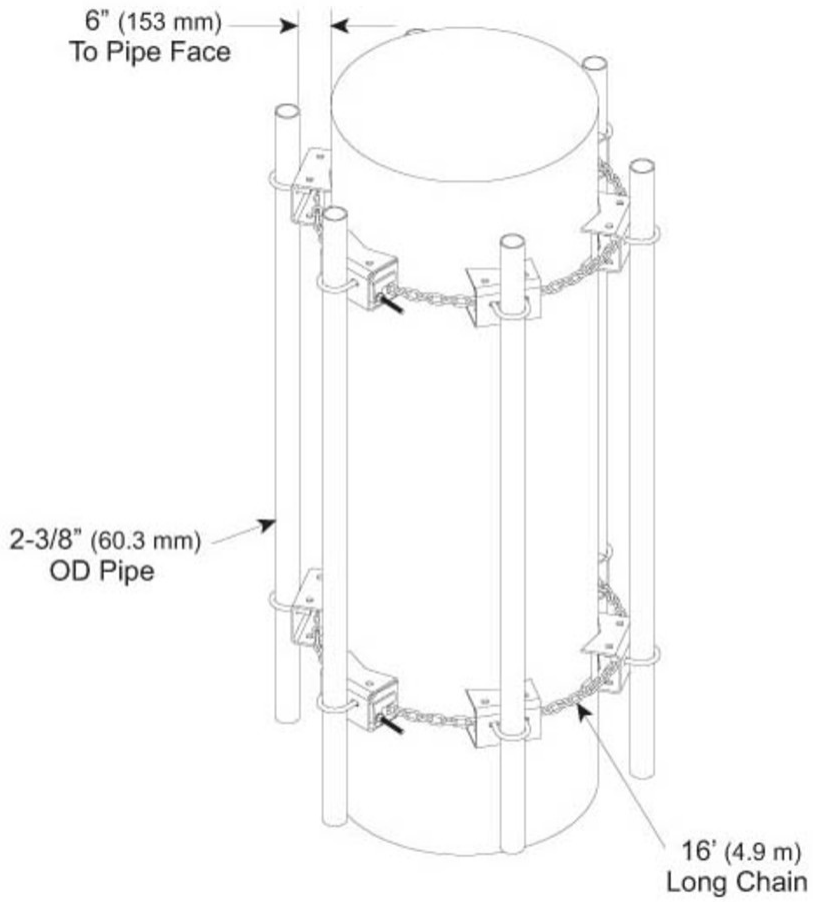

Material Specifications

Material Type	Hot dip galvanized steel

Mechanical Specifications

Wind Rating	120 mph (BWS) at 100 ft AGL
Wind Rating Criteria	One 96 in x 10 in panel antenna per sector
Wind Rating Test Method	TIA/EIA-222

Packaging and Weights

Included	Chains | Plain end pipes

©2023 CommScope, Inc. All rights reserved. All trademarks identified by ® or ™ are registered trademarks, respectively, of CommScope. All specifications are subject to change without notice. See www.commscope.com for the most current information. Revised: March 23, 2023

CM-606-72

Packaging quantity	1
Weight, net	104.8 kg | 231.044 lb

Regulatory Compliance/Certifications

Agency	Classification
ISO 9001:2015	Designed, manufactured and/or distributed under this quality management system

Included Products

CM-606-B	–	Chain Mount Base Kit, 14 in stand-off 16 ft chain
MT-651	–	Plain End Pipe, 2-3/8 in OD x 72 in .120" A500C 46Ksi

* Footnotes

Wind Rating	BWS—Base Wind Speed; FBC—Florida Building Code

©2023 CommScope, Inc. All rights reserved. All trademarks identified by ® or ™ are registered trademarks, respectively, of CommScope. All specifications are subject to change without notice. See www.commscope.com for the most current information. Revised: March 23, 2023