MC-K10L-12-72

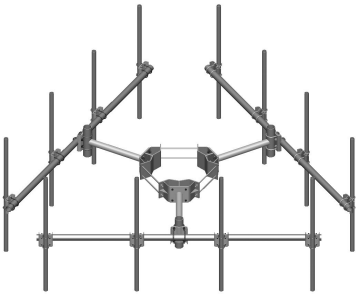

Monopole Co-location T-Frame Kit, 30 in to 60 in OD, 10 ft face, includes pipe

OBSOLETE

This product was discontinued on: August 18, 2022

Replaced By:

MC-K10M-12-72	Monopole Co-location T-Frame kit, 12 in to 50 in OD, 10 ft 6 in face, includes pipe

Product Classification

Product Type	Monopole T-frame kit

General Specifications

Mounting	Monopole, 762–1524 mm (30–60 in) OD
Pipe, quantity	12
Sectors, quantity	3

Dimensions

Height	1,828.8 mm | 72 in
Face Width	3.2 m | 10.5 ft
Width	3,200.4 mm | 126 in
Length	914.4 mm | 36 in
Pipe Length	1,828.8 mm | 72 in
Mounting Diameter, maximum	1524 mm | 60 in
Mounting Diameter, minimum	762 mm | 30 in
Pipe Outer Diameter	60.96 mm | 2.4 in
Stand-off Distance	914.4 mm | 36 in

©2024 CommScope, Inc. All rights reserved. CommScope and the CommScope logo are registered trademarks of CommScope and/or its affiliates in the U.S. and other countries. For additional trademark information see https://www.commscope.com/trademarks. All product names, trademarks and registered trademarks are property of their respective owners. Revised: January 4, 2024

MC-K10L-12-72

Outline Drawing

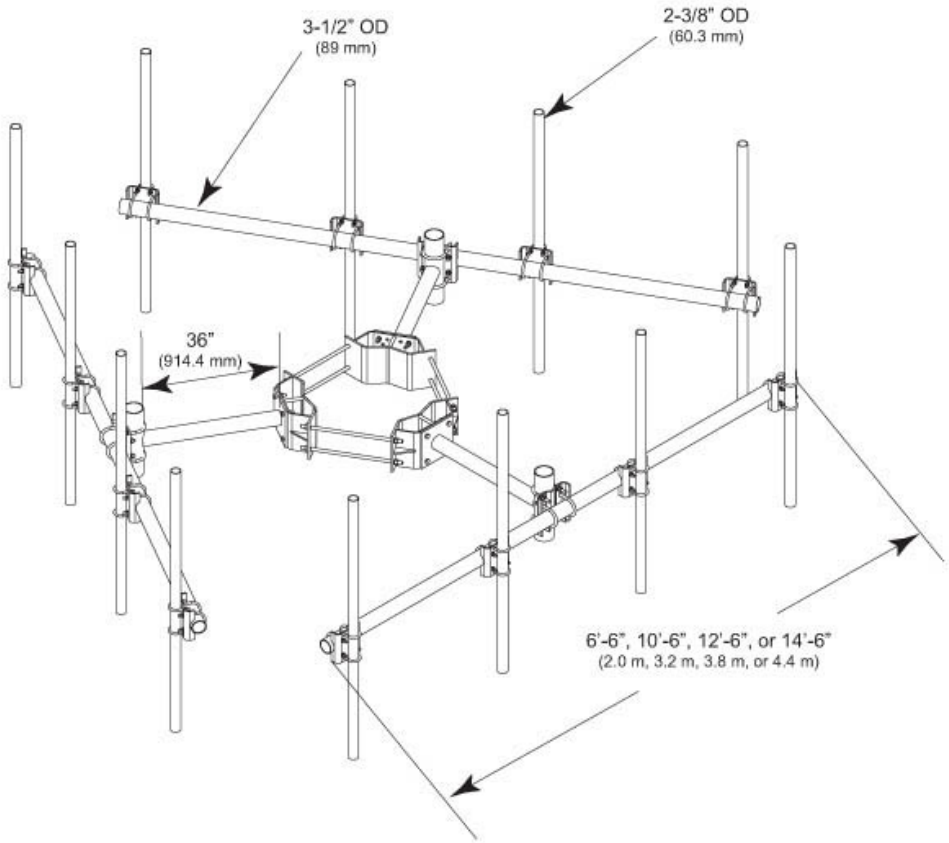

Material Specifications

Material Type	Hot dip galvanized steel

Mechanical Specifications

Wind Rating	120 mph (BWS) at 150 ft AGL | 140 mph (3-second gust) at 150 ft AGL using Exposure D per FBC
Wind Rating Criteria	Four 72 in x 8 in panel antennas per sector
Wind Rating Test Method	TIA/EIA-222

Environmental Specifications

EPA with 1/2 in (12 mm) radial ice	1.18 m² | 12.7 ft²
EPA without ice	0.929 m² | 10 ft²

©2024 CommScope, Inc. All rights reserved. CommScope and the CommScope logo are registered trademarks of CommScope and/or its affiliates in the U.S. and other countries. For additional trademark information see https://www.commscope.com/trademarks. All product names, trademarks and registered trademarks are property of their respective owners. Revised: January 4, 2024

MC-K10L-12-72

Packaging and Weights

Included	Cellular pipe frames | Pipe mounts | Ring mount | Stand-off arms
Packaging quantity	1
Weight, net	556.104 kg | 1226 lb

Regulatory Compliance/Certifications

Agency	Classification
ISO 9001:2015	Designed, manufactured and/or distributed under this quality management system

Included Products

MC-K10L-B	–	Monopole Co-location T-Frame Kit, 30 in to 60 in OD, 10 ft face, pipe ordered separately
MT-219-H	–	Pipe Mount Kit - 2-3/8" TO 3-1/2" PIPE - pipe not included
MT-651	–	Plain End Pipe, 2-3/8 in OD x 72 in .120" A500C 46Ksi

* Footnotes

Wind Rating	BWS—Base Wind Speed; FBC—Florida Building Code
EPA with 1/2 in (12 mm) radial ice	EPA—Effective Projected Area
EPA without ice	EPA—Effective Projected Area

©2024 CommScope, Inc. All rights reserved. CommScope and the CommScope logo are registered trademarks of CommScope and/or its affiliates in the U.S. and other countries. For additional trademark information see https://www.commscope.com/trademarks. All product names, trademarks and registered trademarks are property of their respective owners. Revised: January 4, 2024

MC-K10L-B

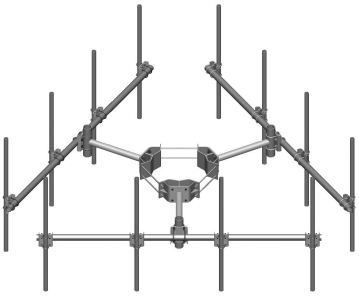

Monopole Co-location T-Frame Kit, 30 in to 60 in OD, 10 ft face, pipe ordered separately

Product Classification

Product Type	Monopole T-frame kit

General Specifications

Mounting	Monopole, 762–1524 mm (30–60 in) OD
Pipe, quantity	0
Sectors, quantity	3

Dimensions

Height	254 mm | 10 in
Face Width	3.2 m | 10.5 ft
Width	3,200.4 mm | 126 in
Length	914.4 mm | 36 in
Mounting Diameter, maximum	1524 mm | 60 in
Mounting Diameter, minimum	762 mm | 30 in
Pipe Outer Diameter	60.96 mm | 2.4 in
Stand-off Distance	914.4 mm | 36 in

©2024 CommScope, Inc. All rights reserved. CommScope and the CommScope logo are registered trademarks of CommScope and/or its affiliates in the U.S. and other countries. For additional trademark information see https://www.commscope.com/trademarks. All product names, trademarks and registered trademarks are property of their respective owners. Revised: January 4, 2024

MC-K10L-B

Outline Drawing

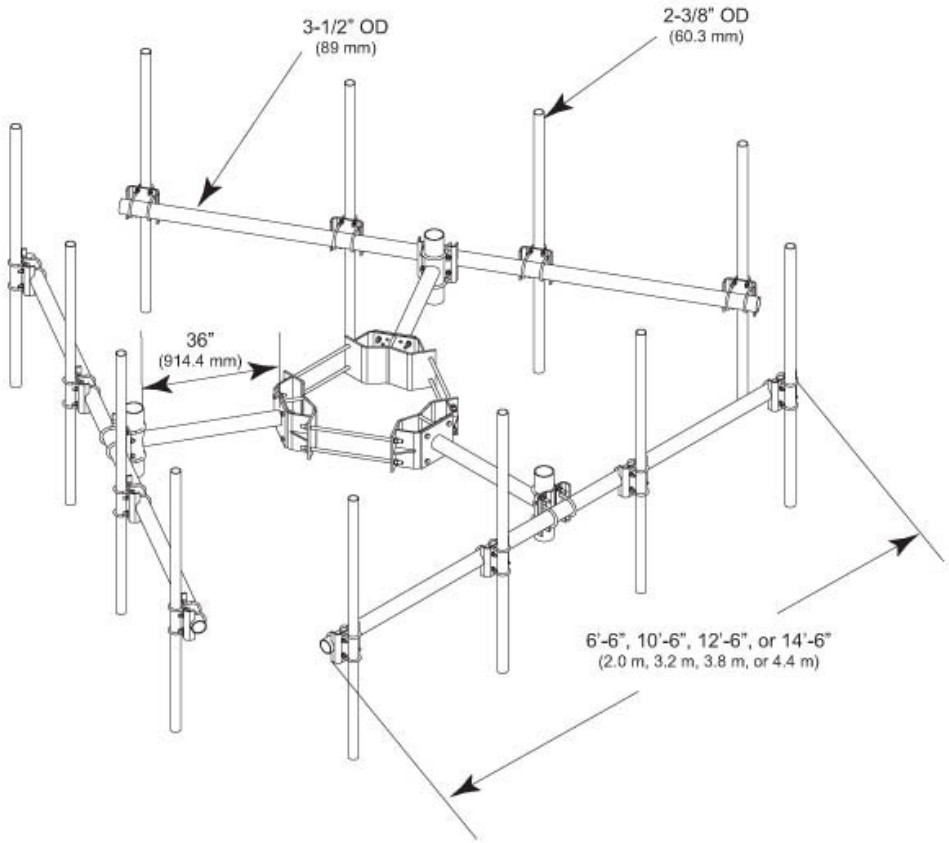

Material Specifications

Material Type	Hot dip galvanized steel

Mechanical Specifications

Wind Rating	120 mph (BWS) at 150 ft AGL | 140 mph (3-second gust) at 150 ft AGL using Exposure D per FBC
Wind Rating Criteria	Four 72 in x 8 in panel antennas per sector
Wind Rating Test Method	TIA/EIA-222

Environmental Specifications

EPA with 1/2 in (12 mm) radial ice	1.18 m² | 12.7 ft²
EPA without ice	0.929 m² | 10 ft²

©2024 CommScope, Inc. All rights reserved. CommScope and the CommScope logo are registered trademarks of CommScope and/or its affiliates in the U.S. and other countries. For additional trademark information see https://www.commscope.com/trademarks. All product names, trademarks and registered trademarks are property of their respective owners. Revised: January 4, 2024

MC-K10L-B

Packaging and Weights

Included	Cellular pipe frames | Ring mount | Stand-off arms
Packaging quantity	1
Weight, net	376.89 kg | 830.9 lb

Regulatory Compliance/Certifications

Agency	Classification
ISO 9001:2015	Designed, manufactured and/or distributed under this quality management system

* Footnotes

Wind Rating	BWS—Base Wind Speed; FBC—Florida Building Code
EPA with 1/2 in (12 mm) radial ice	EPA—Effective Projected Area
EPA without ice	EPA—Effective Projected Area

©2024 CommScope, Inc. All rights reserved. CommScope and the CommScope logo are registered trademarks of CommScope and/or its affiliates in the U.S. and other countries. For additional trademark information see https://www.commscope.com/trademarks. All product names, trademarks and registered trademarks are property of their respective owners. Revised: January 4, 2024

MT-219-H

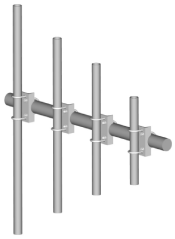

Pipe Mount Kit - 2-3/8" TO 3-1/2" PIPE - pipe not included

Product Classification

Product Type	Pipe mount kit

General Specifications

Mounting	Pipe, 60.3 mm (2-3/8 in) OD | Pipe, 88.9 mm (3-1/2 in) OD

Dimensions

Height	254 mm | 10 in
Width	127 mm | 5 in
Length	127 mm | 5 in
Mounting Diameter, maximum	88.9 mm | 3.5 in
Mounting Diameter, minimum	60.325 mm | 2.375 in

Material Specifications

Material Type	Hot dip galvanized steel

Packaging and Weights

Included	Crossover bracket | U-bolts
Packaging quantity	1
Weight, net	4.9 kg | 10.803 lb

Regulatory Compliance/Certifications

Agency	Classification
ISO 9001:2015	Designed, manufactured and/or distributed under this quality management system
REACH-SVHC	Compliant as per SVHC revision on www.commscope.com/ProductCompliance
ROHS	Compliant
UK-ROHS	Compliant

©2024 CommScope, Inc. All rights reserved. CommScope and the CommScope logo are registered trademarks of CommScope and/or its affiliates in the U.S. and other countries. For additional trademark information see https://www.commscope.com/trademarks. All product names, trademarks and registered trademarks are property of their respective owners. Revised: October 25, 2023

©2024 CommScope, Inc. All rights reserved. CommScope and the CommScope logo are registered trademarks of CommScope and/or its affiliates in the U.S. and other countries. For additional trademark information see https://www.commscope.com/trademarks. All product names, trademarks and registered trademarks are property of their respective owners. Revised: October 25, 2023

MT-651

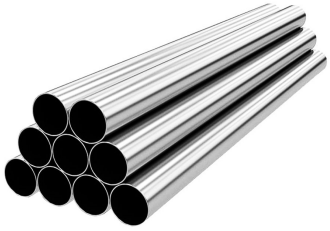

Plain End Pipe, 2-3/8 in OD x 72 in .120" A500C 46Ksi

Product Classification

Product Type	Plain end pipe

General Specifications

Pipe, quantity	1

Dimensions

Height	60.96 mm | 2.4 in
Width	60.96 mm | 2.4 in
Length	1,828.8 mm | 72 in
Pipe Length	1,828.8 mm | 72 in
Pipe Outer Diameter	60.96 mm | 2.4 in
Material Thickness	3.048 mm | 0.12 in

Material Specifications

Material Type	A500 | Hot dip galvanized steel
Material Grade	C
Material Strength	46 KSI

Packaging and Weights

Included	Pipe
Packaging quantity	1
Weight, net	8 kg | 17.637 lb

Regulatory Compliance/Certifications

Agency	**Classification**
CHINA-ROHS	Above maximum concentration value
ISO 9001:2015	Designed, manufactured and/or distributed under this quality management system

©2024 CommScope, Inc. All rights reserved. CommScope and the CommScope logo are registered trademarks of CommScope and/or its affiliates in the U.S. and other countries. For additional trademark information see https://www.commscope.com/trademarks. All product names, trademarks and registered trademarks are property of their respective owners. Revised: December 15, 2023

MT-651

ROHS	Compliant/Exempted
UK-ROHS	Compliant

©2024 CommScope, Inc. All rights reserved. CommScope and the CommScope logo are registered trademarks of CommScope and/or its affiliates in the U.S. and other countries. For additional trademark information see https://www.commscope.com/trademarks. All product names, trademarks and registered trademarks are property of their respective owners. Revised: December 15, 2023