REVISIONS			
REV	CMO	DATE	APPROVED
A	40073669CMO	19-SEP-18	VFV

STRONG BRACKET INSTALLATION 4X6 EXPRESS EXIT

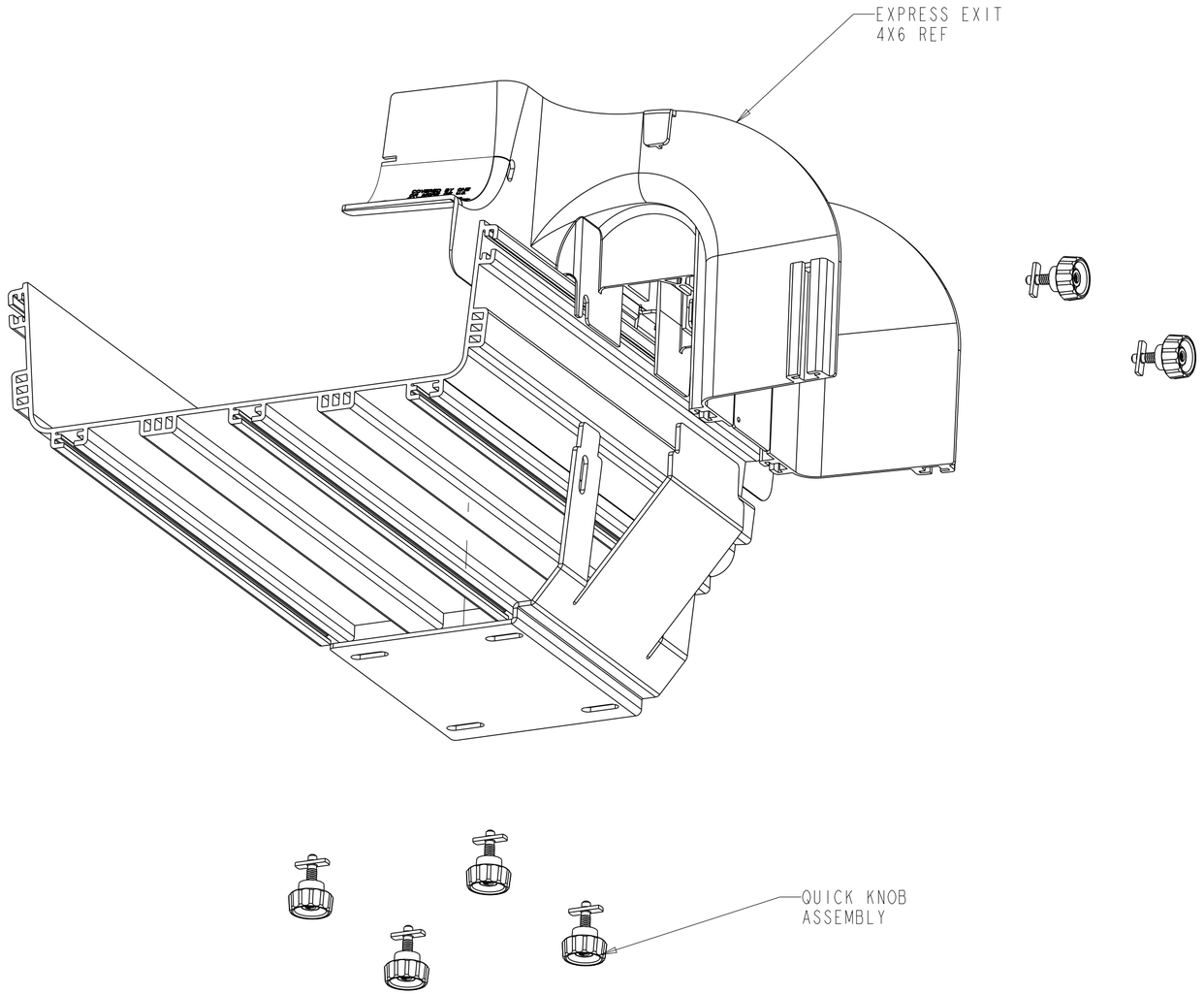

PARTS LIST 4X6	
DESCRIPTION	QTY
STRONG BRACKET 4X4	1
QUICK KNOB ASSEMBLY	6

STRONG BRACKET INSTALLATION 4X4 EXPRESS EXIT

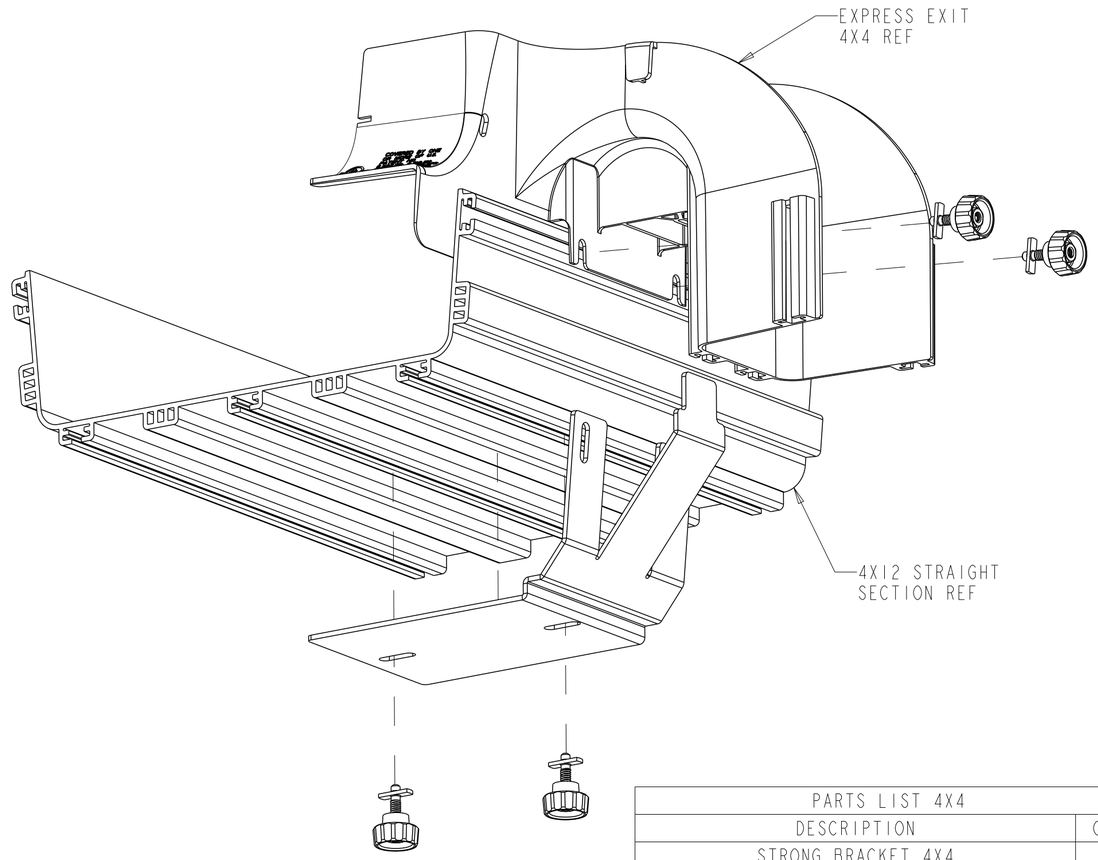

PARTS LIST 4X4	
DESCRIPTION	QTY
STRONG BRACKET 4X4	1
QUICK KNOB ASSEMBLY	4

INSTALLATION INSTRUCTIONS:

1. PLACE THE BRACKET UNDER THE STRAIGHT SECTION AND USE QUICK KNOB TO HOLD IT IN BOTTOM OF THE STRAIGHT SECTION.

2. INSTALL THE EXPRESS EXIT (NOT INCLUDED) IN THE BRACKET AND USE THE QUICK KNOBS TO HOLD IT.

© 2018 CommScope, Inc. Confidential
NOTICE: These drawings and specifications are the proprietary property of COMMSCOPE, INC. and may be used only for the specific purpose authorized in writing by COMMSCOPE, INC.

COMMSCOPE, INC.

TOLERANCES: N/A	SAP MATERIAL MASTER:
FINISH: N/A	MATERIAL: N/A
DRAFTER: VICTOR FLORES	TITLE: STRONGER BRACKET, INSTALLATION DWG
CHECKER: HECTOR URENO	
ENGINEER: RUBEN ARVILLA	SIZE: A2 / SCALE: 0.125 / DOCUMENT NO.: 660002746
CMO: 40073669CMO	

SYMBOLOGY AGREES WITH ASME Y14.5M - 2009. ALL SHEETS ARE THE SAME REVISION AND STATUS.

ALL SURFACES ✓ WORK AREA: 58

MODEL			DRAWING			SHEET
VERSION	STATUS	REVISION	VERSION	STATUS	REVISION	1 OF 1
00			00	RE	A	

SAP-ENTERPRISE-A2-2016-1ST.FRM