1.0 GENERAL NOTES
- 1.1 ALL METRIC DIMENSIONS ARE IN BRACKETS [X. X]
- 1.2 FOR PATENT INFO: https://www.cs-pat.com

2.0 DESIGN NOTES
- 2.1 ANY HAZARDS OR OBSTRUCTIONS TO THE CLIMBING FACILITY AND SAFETY CLIMB MUST BE IDENTIFIED PRIOR TO INSTALLING THE APPURTENANCE. ADDITIONAL PRODUCTS MAY BE REQUIRED TO MAINTAIN THE INTEGRITY OF THE SAFETY CLIMB. DURING INSTALLATION, TEMPORARY AND/OR PERMANENT PRECAUTIONARY MEASURES SHOULD BE TAKEN TO PRESERVE THE CLIMBING FACILITY AND/OR SAFETY CLIMB.
- 2.2 FITS MONOPOLES 12"-45" O.D.
- 2.3 ANTENNA PIPES SHOULD BE CENTERED AND EVENLY SPACED.
- 2.4 POSITION MOUNT OR ADJUST SAFETY CLIMB CABLE SO NOT TO HINDER OR DAMAGE OR OBSTRUCT THE SAFETY CLIMB. SAFETY CABLE ROUTING BRACKET MAY BE PURCHASED SEPARATELY.

3.0 MANUFACTURING/SPECIAL REQUIREMENTS
- 3.1 TIGHTEN ALL BOLTS SECURING FLAT PLATES BY THE TURN-OF-NUT METHOD. TIGHTEN ALL U-BOLTS USING TURN-OF-NUT METHOD WITH ATTENTION TO LEAVE EQUAL DISTANCE AND EQUAL FORCE ON EACH LEG OF THE U-BOLT. ALL FASTENERS SHOULD BE TIGHTENED PER AISC 6.5.2

4.0 TEST

5.0 PACKAGING
- 5.1 PACKAGING SHALL MEET COMMSCOPE REQUIREMENTS PER DOCUMENT IS-PL-3005
- 5.2 PRINTED DOCUMENT TO BE PLACED INSIDE POLYBAG AND THEN IN SHIPPING CONTAINER
- 5.3 EXTRA HARDWARE MAYBE SUPPLIED, BAGGED AND SHIPPED

REVISIONS			
REV.	DESCRIPTION	DATE	APPROVED
A	INITIAL RELEASE		

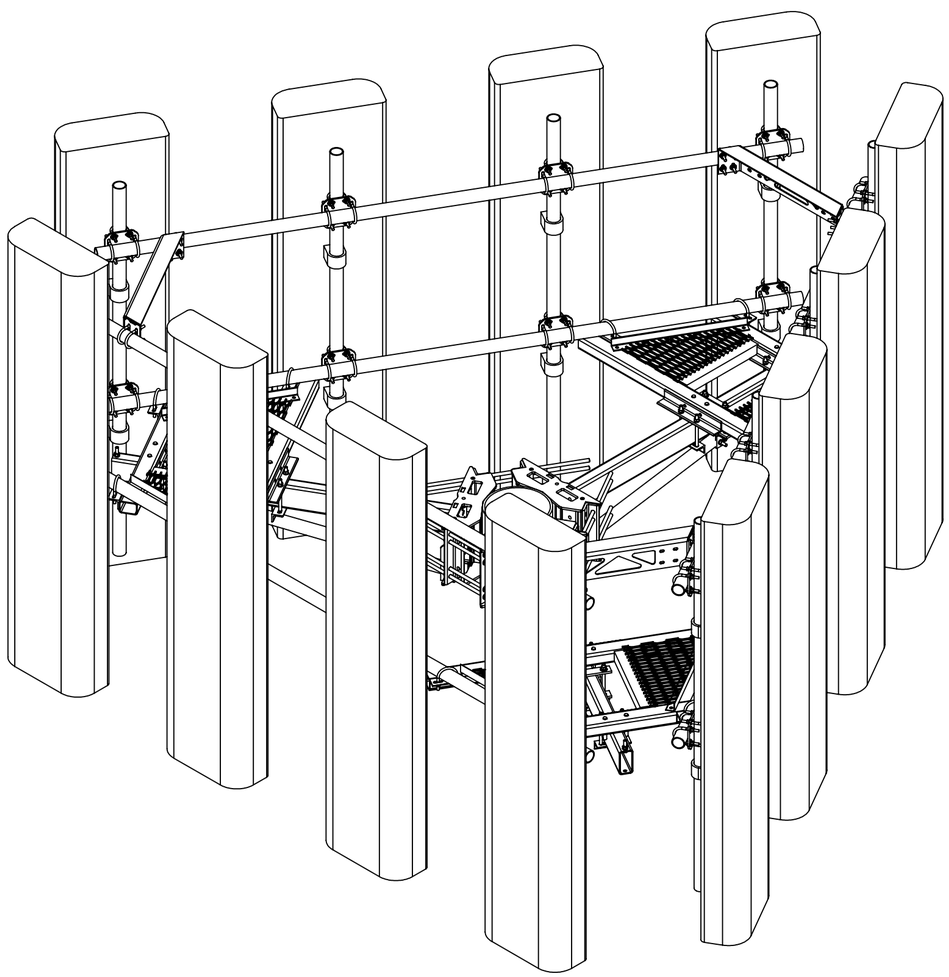

MONOPOLE ADJUSTABLE PLATFORM
MP-PP13M-12C-96 SHOWN FOR REFERENCE
(SEE TABLE 1 FOR ALL CONFIGURATIONS)

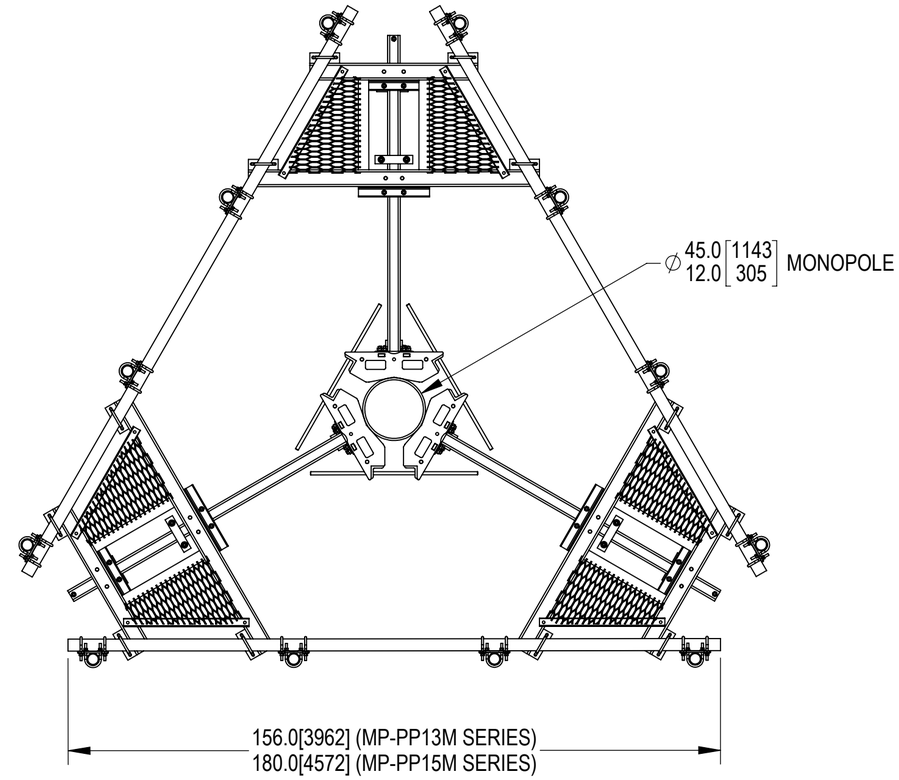

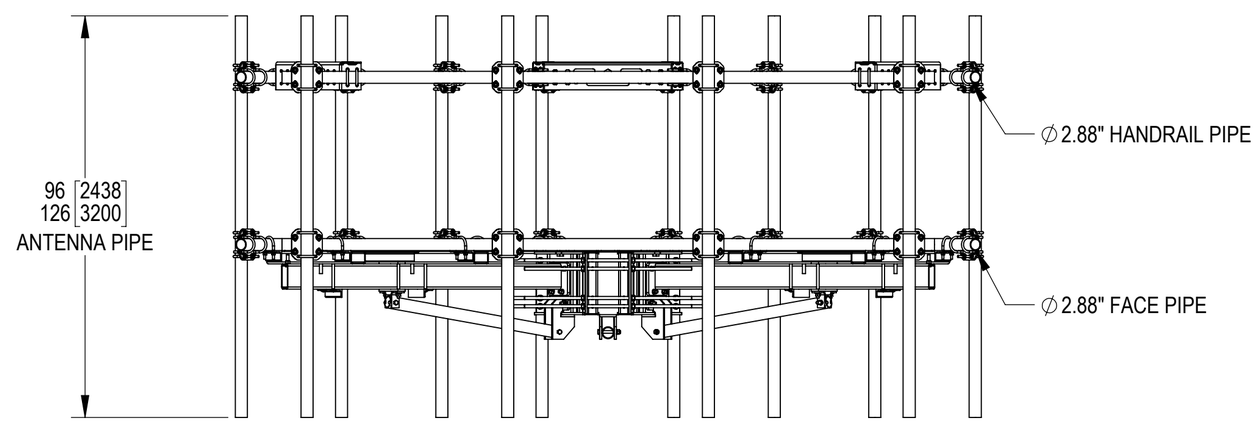

COMMSCOPE, INC. OF NORTH CAROLINA

TOLERANCES			
1 PLACE .X[.X] ±	0.2[6.3]	3 PLACE .XXX[.X] ±	0.060[1.5]
2 PLACE .XX[.X] ±	0.12[3.0]	ANGLES ±	2°

SAP MATERIAL MASTER

FINISH

MATERIAL

UNLESS OTHERWISE SPECIFIED DIMENSIONS ARE IN INCHES INTERPRET PER ANSI Y 14.5M-1994

	NAME	DATE
CE	JL1183	31MAY23
RW		
AD		
RE		
ECN		

TITLE
MONOPOLE PLATFORM SERIES

DENSITY	lbs/in³
MASS	lbs
VOLUME	in³
SURFACE AREA	in²
HEIGHT	
LENGTH	
WIDTH	

SCALE 1:28

DOCUMENT NO. MP-PP 13M(15M)

SIZE	Auth Group	MODEL VERSION	MODEL STATUS	MODEL REVISION	DRAWING VERSION	DRAWING STATUS	DRAWING REVISION	SHEET
C		00						1 OF 16

© 2023 CommScope, Inc. Confidential

PART NUMBERS, WEIGHTS, & EPA

TABLE 1: CONFIGURATIONS

PART NUMBER	DESCRIPTION	WEIGHT (LBS)	(EPA)A (FT^2)*	(EPA)A 1/2" ICE THICKNESS (FT^2)*	ANTENNA PIPES	INCLUDED PARTS																								
						MC-RMHD-1245-3	MC-AS-SB02	MC-AS-SB03	MC-AS-6100	RK48	MTC323704	RK02	GB-0550A	MT-381-10	SWF-05	GB-0524A	MC-AS-6000	9615-14	GWL05HB20	GN05HB20	GB-05245	GUB-4355-12	MT197H	MT546156	MT546180	HRK-13-12-02	HRK-15-12-02	XP-2525-12	XP-2525-15	MT54696	MT-546-126
MC-PP13M-12C-B	MP,13',3S,BASE-KIT,W/HR	1748.5	29.99	38.05	-	1	1	-	3	3	6	6	6	6	30	6	6	12	1	1	3	1	3	3	-	1	-	-	-	-	-
MC-PP13M-12C-96	MP,13',3S,(12)2.88"X96"PIPE,W/HR	2500.9			12	1	1	-	3	3	6	6	6	6	30	6	6	12	1	1	3	1	3	3	-	1	-	2	-	12	-
MC-PP13M-12C-126	MP,13',3S,(12)2.88"X126"PIPE,W/HR	2681.9			12	1	1	-	3	3	6	6	6	6	30	6	6	12	1	1	3	1	3	3	-	1	-	2	-	-	12
MC-PP15M-12C-B	MP,15',3S,BASE-KIT,W/HR	2060.7	36.66	48.93	-	1	-	1	3	3	6	6	6	6	30	6	6	12	1	1	3	1	3	-	3	-	1	-	-	-	-
MC-PP15M-12C-96	MP,15',3S,(12)2.88"X96"PIPE,W/HR	2813.2			12	1	-	1	3	3	6	6	6	6	30	6	6	12	1	1	3	1	3	-	3	-	1	2	-	12	-
MC-PP15M-12C-126	MP,15',3S,(12)2.88"X126"PIPE,W/HR	2994.2			12	1	-	1	3	3	6	6	6	6	30	6	6	12	1	1	3	1	3	-	3	-	1	2	-	-	12
MC-PP15M-15C-126	MP,15',3S,(15)2.88"X126"PIPE,W/HR	3227.5			15	1	-	1	3	3	6	6	6	6	30	6	6	12	1	1	3	1	3		3		1	-	2	-	15

* (EPA)A DOES NOT INCLUDE ANTENNA PIPES AND MOUNTING HARDWARE. IF DESIRED, ADD ANTENNA PIPE PER TABLE 2

TABLE 2: EPA OF EACH ANTENNA PIPE

ANTENNA PIPE	(EPA)A (FT^2)	(EPA)A W/ 1/2" ICE THICKNESS (FT^2)
2-7/8" X 96"	1.84	2.48
2-7/8" X126"	2.42	3.26

NOTE:
1. ANTENNA PIPES ARE CONSIDERED SEPARATELY.
2. KA FACTOR OF 3-SECTOR EPA INCLUDED.
3. COMBINE THE ASSOCIATED EPA VALUES IN THE TABLES ABOVE TO DETERMINE THE EPA OF A MOUNT MODEL WITH A LISTED MOUNT PIPE CONFIGURATION.
   FOR EXAMPLE, MC-PP13M-12C-96 HAS A 3-SECTOR EPA OF 29.99 FT2 WITH NO ICE PLUS 12 ANTENNA PIPES WITH A 3-SECTOR EPA OF 12X1.84=22.08 FT2 WITH NO ICE.
   SO, THE TOTAL EPA OF 52.07 FT2 FOR THE MC-PP13M-12C-96

© 2023 CommScope, Inc. Confidential

COMMSCOPE, INC. OF NORTH CAROLINA

TITLE

SIZE	SCALE	DOCUMENT NO.
C	1:48	

DRAWING			SHEET
VERSION	STATUS	REVISION	2 OF 16

MP-PP13M SERIES FLATFORM FOR INSTALLATION

ADJUST THE INSTALLATION DISTANCE ACCORDING TO THE DIAMETER OF THE MONOPOLE WHEN INSTALL PLATFORM MC-AS-4000-00.
SEE TABLE 3 DETAIL FOR THE DISTANCE ADJUSTED.

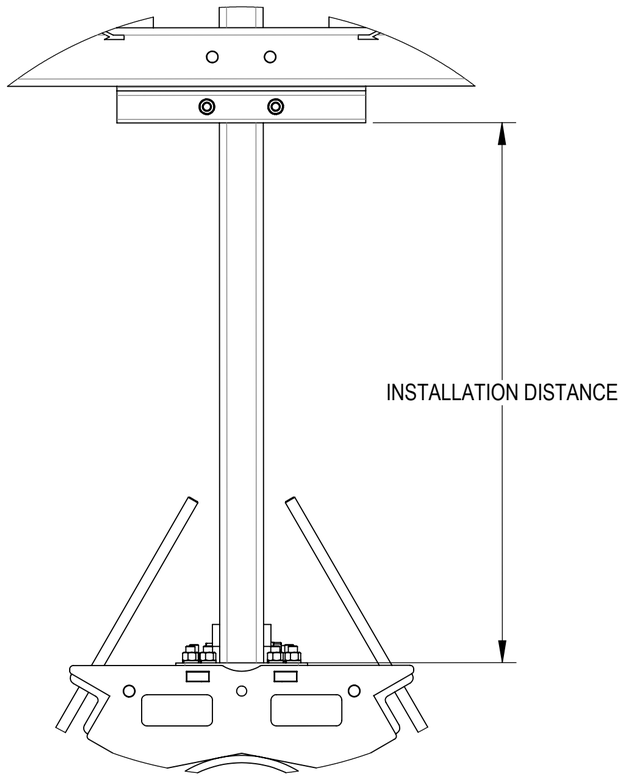

DETAIL X
SCALE 1 : 8

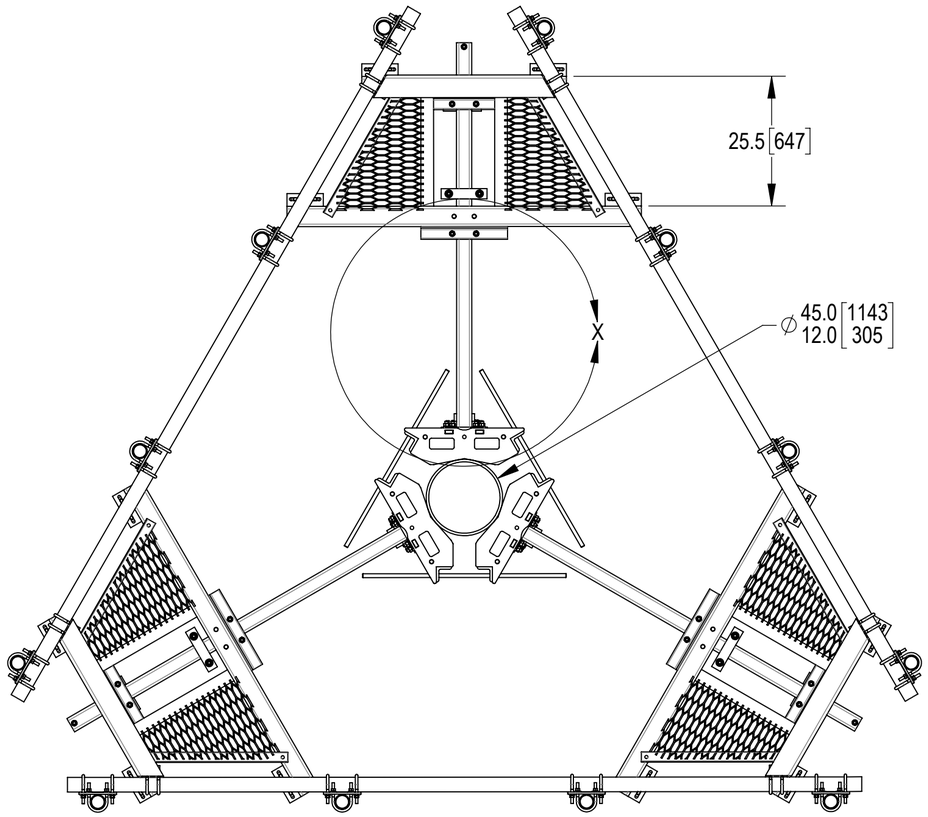

MP-PP13M-12C-96 SHOWN FOR REFERENCE
(SEE TABLE 1 FOR ALL CONFIGURATIONS)

TABLE 3: PLATFORM INSTALLATION POSITION

DIAMETER OF MONOPOLE (INCH)	DISATNCE (INCH)	DIAMETER OF MONOPOLE (MM)	DISATNCE (MM)
12	38.42	304.8	975.9
15	36.89	381.0	937.0
17.5	35.62	444.5	904.7
20	34.34	508.0	872.2
22.5	33.07	571.5	840.0
25	31.79	635.0	807.5
27.5	30.52	698.5	775.2
30	29.24	762.0	742.7
32.5	27.97	825.5	710.4
35	26.70	889.0	678.2
37.5	25.42	952.5	645.7
40	24.15	1016.0	613.4
42.5	22.87	1079.5	580.9
45	21.60	1143.0	548.6

© 2023 CommScope, Inc. Confidential

COMMSCOPE, INC. OF NORTH CAROLINA

TITLE

SIZE	SCALE	DOCUMENT NO.
C	1:23	

DRAWING			SHEET
VERSION	STATUS	REVISION	3 OF 16

MP-PP15M SERIES FLATFORM FOR INSTALLATION

ADJUST THE INSTALLATION DISTANCE ACCORDING TO THE DIAMETER OF THE MONOPOLE WHEN INSTALL PLATFORM MC-AS-7000-00.
SEE TABLE 4 DETAIL FOR THE DISTANCE ADJUSTED.

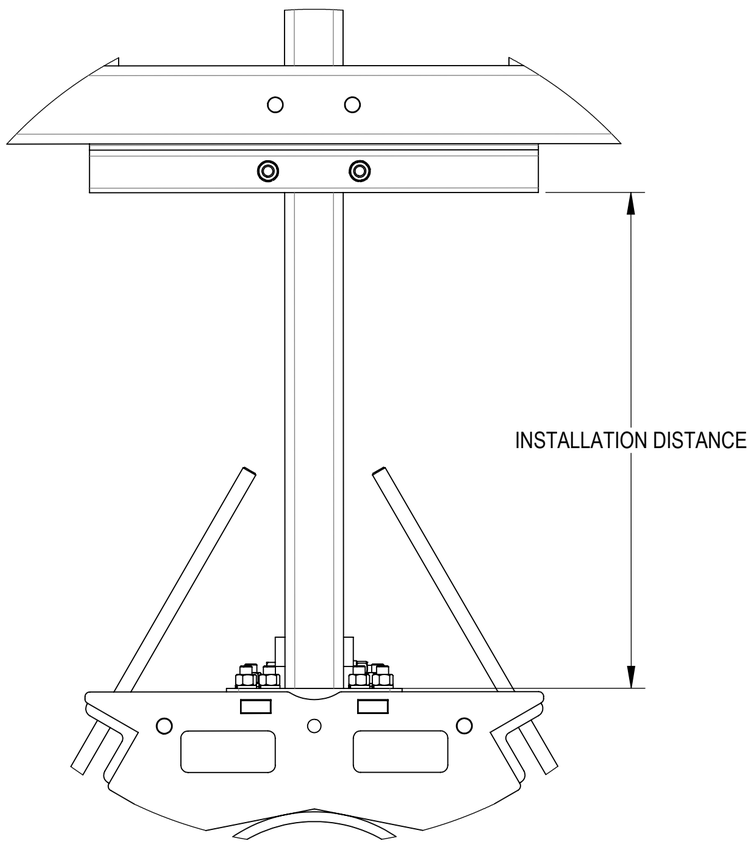

DETAIL Y
SCALE 1 : 6

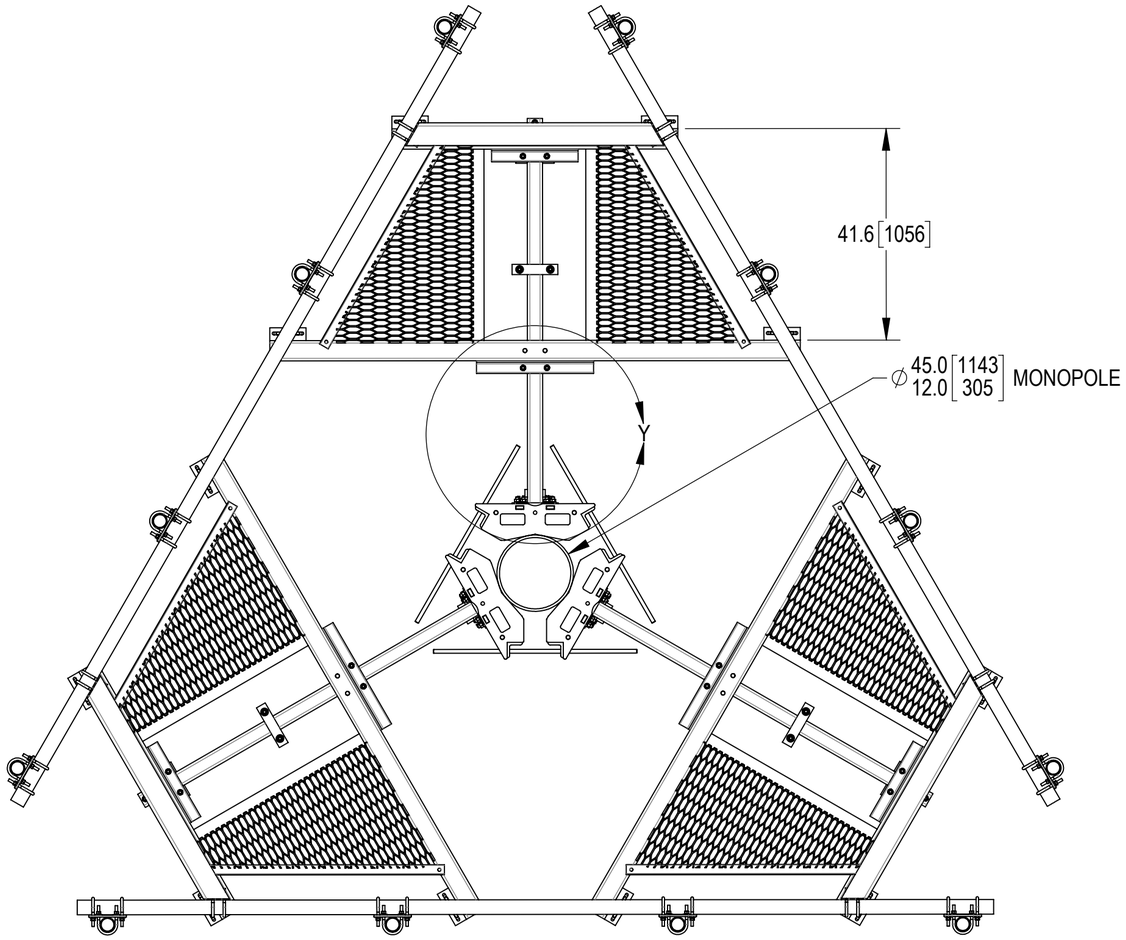

MP-PP15M-12C-96 SHOWN FOR REFERENCE
(SEE TABLE 1 FOR ALL CONFIGURATIONS)

TABLE 4: PLATFORM INSTALLATION POSITION

DIAMETER OF MONOPOLE (INCH)	DISATNCE (INCH)	DIAMETER OF MONOPOLE (MM)	DISATNCE (MM)
12	26.93	304.8	684.0
15	25.4	381.0	645.2
17.5	24.13	444.5	612.9
20	22.85	508.0	580.4
22.5	21.58	571.5	548.1
25	20.3	635.0	515.6
27.5	19.03	698.5	483.4
30	17.75	762.0	450.9
32.5	16.48	825.5	418.6
35	15.21	889.0	386.3
37.5	13.93	952.5	353.8
40	12.66	1016.0	321.6
42.5	11.38	1079.5	289.1
45	10.11	1143.0	256.8

© 2023 CommScope, Inc. Confidential

COMMSCOPE, INC. OF NORTH CAROLINA

TITLE

SIZE	SCALE	DOCUMENT NO.			
C	1:23				
		DRAWING			SHEET
		VERSION	STATUS	REVISION	4 OF 16

COMPONENTS FOR INSTALLATION
MP-PP13M-12C-B SHOWN

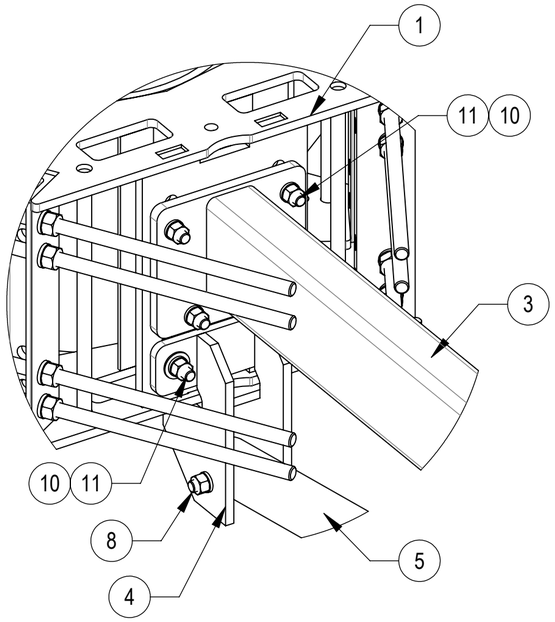

DETAIL A
SCALE 1 : 6

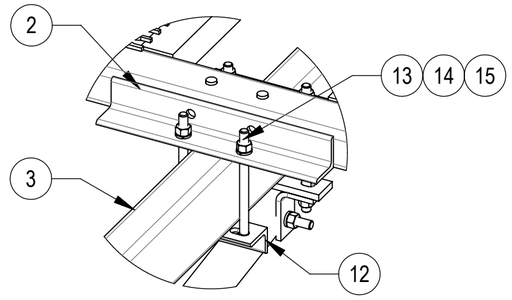

DETAIL B
SCALE 1 : 8

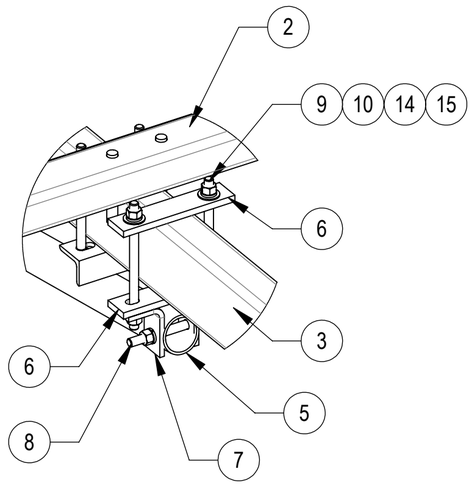

DETAIL D
SCALE 1 : 8

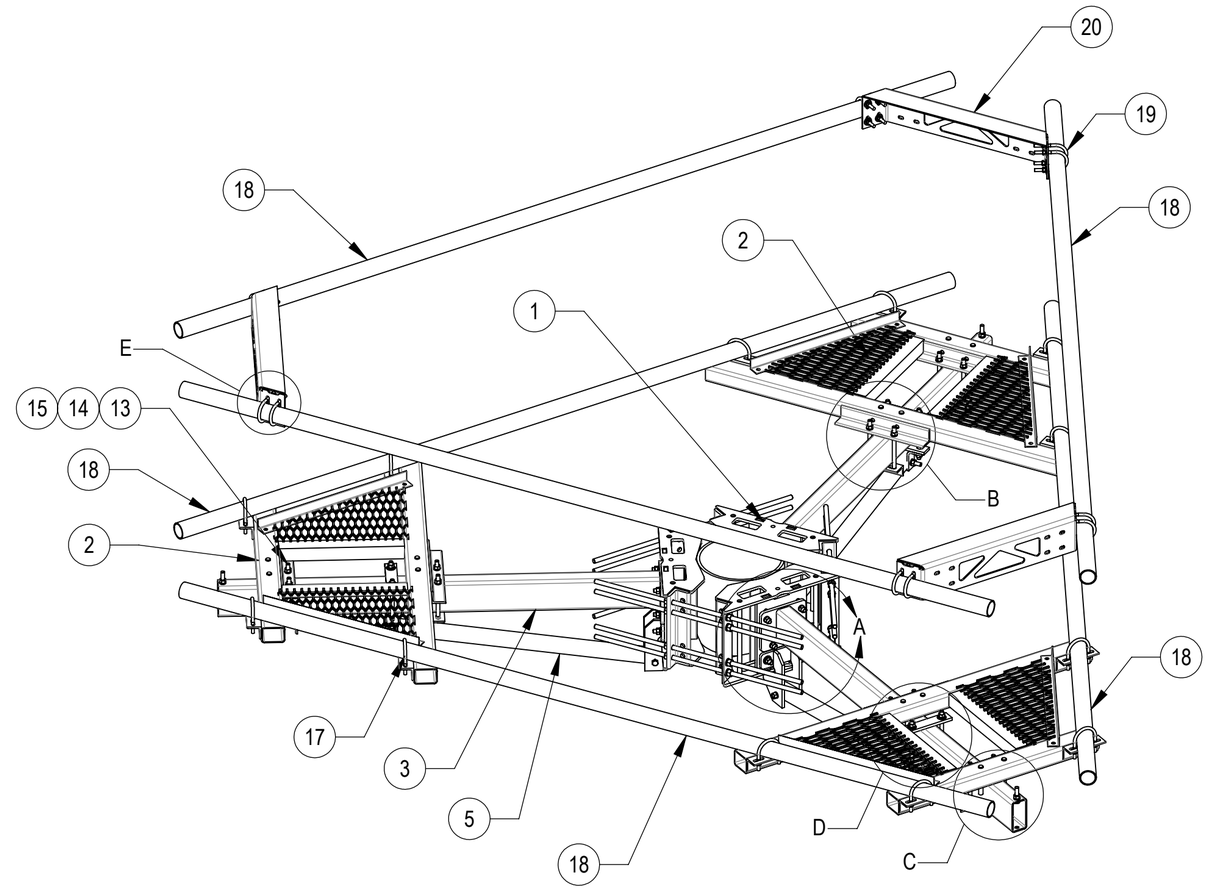

COMPONENT PART NUMBERS PROVIDED FOR ASSEMBLY PURPOSES;
INDIVIDUAL COMPONENTS MAY BE SHIPPED AS PARTS WITHIN AN INCLUDED KIT.

ITEM NO.	PART NUMBER	DESCRIPTION	QTY.	WEIGHT
1	MC-RMHD-1245-3	3 SECTOR RING MOUNT, 12"-45" POLE	1	329.19 LBS
2	MC-AS-4000-00	WELDMENT, CO-LOCATION PLATFORM DECK	3	135.19 LBS
3	MC-AS-5000	WELDMENT, MONO PLATF SPINDLE	3	97.84 LBS
4	MC-AS-6100	WELDMENT, MINI KICKER BRACKET	3	16.47 LBS
5	RK48	KICKER ARM SUPPORT TUBE , 36"	3	21.39 LBS
6	MTC323704	CLAMP BAR	6	2.37 LBS
7	RK02	CONNECTION BRACKET	6	1.21 LBS
8	GB-0550A	5/8" X 5" GALV BOLT KIT (A325)	6	0.52 LBS
9	MT-381-10	5/8" X 10" GALV THREADED ROD	6	0.86 LBS
10	SWF-05	5/8" SST, FLATWASHER 18-8, .687X1.5X.0.078	30	0.04 LBS
11	GB-0524A	5/8" X 2-1/2" GALV HEX BOLT (A325)	18	0.31 LBS
12	MC-AS-6000	ANGLE, CO-LOCATION PLATFORM CLAMP	6	2.60 LBS
13	9615-14	BOLT,CARRIAGE,5/8-11,8.5,STL GALV	12	0.11 LBS
14	GWL-05	5/8" GALV LOCK WASHER	24	0.03 LBS
15	GN-05	5/8" GALV HEX NUT	24	0.08 LBS
16	GB-05245	5/8" X 2-1/2" GALV BOLT KIT	3	0.30 LBS
17	GUB-4355	1/2" X 3-5/8" X 5" GALV U-BOLT	12	0.71 LBS
18	MT546156	2.875" O.D. X 156" PIPE	6	75.58 LBS
19	GUB-4352	1/2" X 3" X 5-1/4" GALV U-BOLT	12	0.71 LBS
20	MC-AS-6200-00	CONNER WELDMEMT, HANDRAIL	3	23.91 LBS

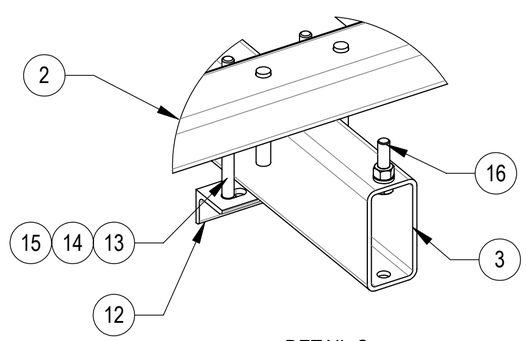

DETAIL C
SCALE 1 : 6

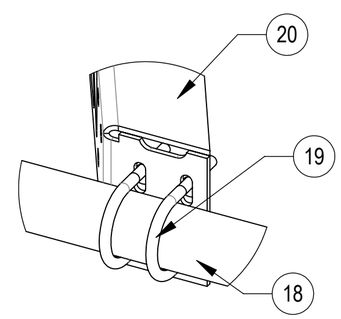

DETAIL E
SCALE 1 : 5

© 2023 CommScope, Inc. Confidential

COMMSCOPE, INC. OF NORTH CAROLINA

TITLE

SIZE	SCALE	DOCUMENT NO.			
C	1:20				
		DRAWING			SHEET
		VERSION	STATUS	REVISION	5 OF 16

COMPONENTS FOR INSTALLATION
MP-PP13M-12C-96 SHOWN

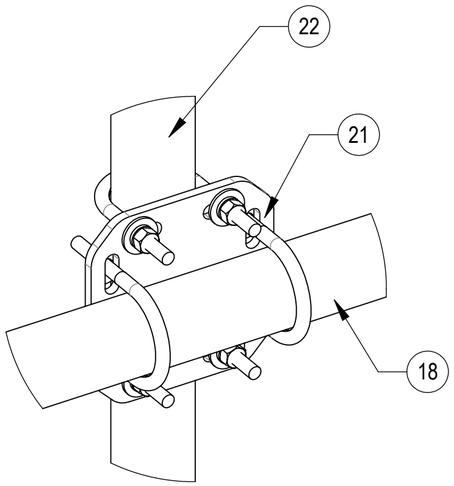

DETAIL F
SCALE 1 : 4

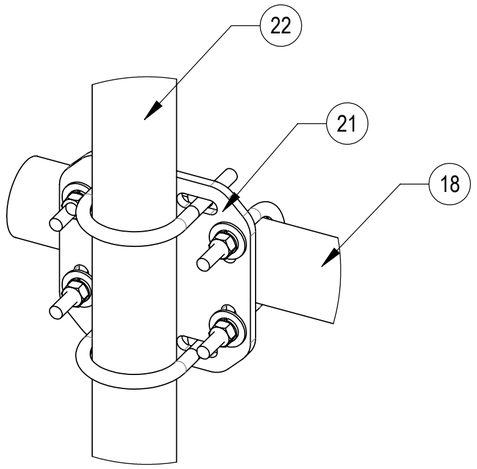

DETAIL G
SCALE 1 : 4

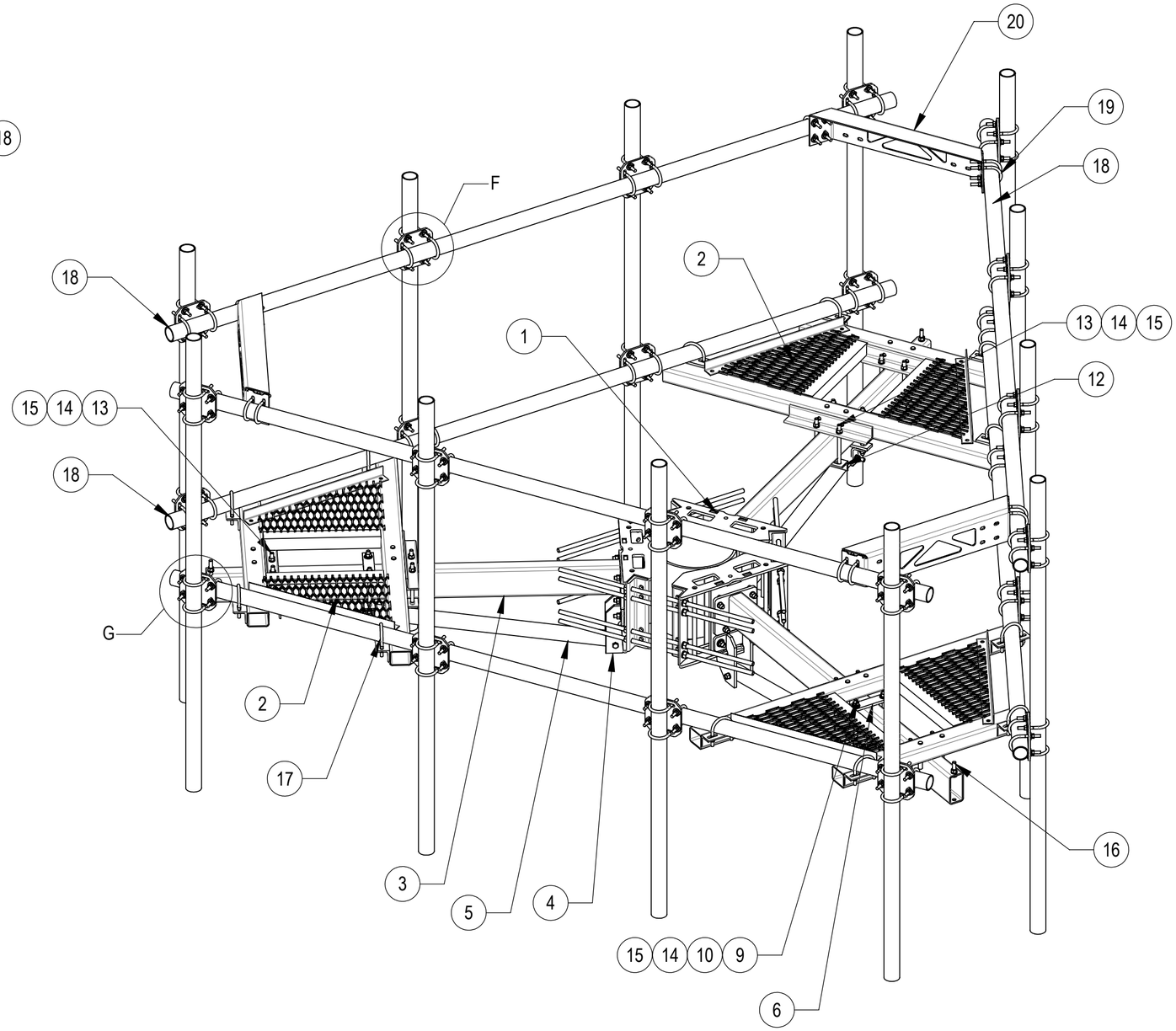

COMPONENT PART NUMBERS PROVIDED FOR ASSEMBLY PURPOSES;
INDIVIDUAL COMPONENTS MAY BE SHIPPED AS PARTS WITHIN AN INCLUDED KIT.

ITEM NO.	PART NUMBER	DESCRIPTION	QTY.	WEIGHT
1	MC-RMHD-1245-3	3 SECTOR RING MOUNT, 12"-45" POLE	1	329.19 LBS
2	MC-AS-4000-00	WELDMENT, CO-LOCATION PLATFORM DECK	3	135.19 LBS
3	MC-AS-5000	WELDMENT, MONO PLATF SPINDLE	3	97.84 LBS
4	MC-AS-6100	WELDMENT, MINI KICKER BRACKET	3	16.47 LBS
5	RK48	KICKER ARM SUPPORT TUBE , 36"	3	21.39 LBS
6	MTC323704	CLAMP BAR	6	2.37 LBS
7	RK02	CONNECTION BRACKET	6	1.21 LBS
8	GB-0550A	5/8" X 5" GALV BOLT KIT (A325)	6	0.52 LBS
9	MT-381-10	5/8" X 10" GALV THREADED ROD	6	0.86 LBS
10	SWF-05	5/8" SST, FLATWASHER 18-8, .687X1.5X.0.078	30	0.04 LBS
11	GB-0524A	5/8" X 2-1/2" GALV HEX BOLT (A325)	18	0.31 LBS
12	MC-AS-6000	ANGLE, CO-LOCATION PLATFORM CLAMP	6	2.60 LBS
13	9615-14	BOLT,CARRIAGE,5/8-11,8.5,STL GALV	12	0.11 LBS
14	GWL-05	5/8" GALV LOCK WASHER	24	0.03 LBS
15	GN-05	5/8" GALV HEX NUT	24	0.08 LBS
16	GB-05245	5/8" X 2-1/2" GALV BOLT KIT	3	0.30 LBS
17	GUB-4355	1/2" X 3-5/8" X 5" GALV U-BOLT	12	0.71 LBS
18	MT546156	2.875" O.D. X 156" PIPE	6	75.58 LBS
19	GUB-4352	1/2" X 3" X 5-1/4" GALV U-BOLT	12	0.71 LBS
20	MC-AS-6200-00	CONNER WELDMEMT, HANDRAIL	3	23.91 LBS
21	XP-2525	CROSSOVER PLATE KIT, 2-7/8 OD X 2-7/8 OD	24	8.37 LBS
22	MT54696	PIPE, 2.875"OD X 96"	12	45.96 LBS

© 2023 CommScope, Inc. Confidential

COMMSCOPE, INC. OF NORTH CAROLINA

TITLE

SIZE	SCALE	DOCUMENT NO.
C	1:20	

DRAWING			SHEET
VERSION	STATUS	REVISION	
			6 OF 16

MP-PP13M-12C-96 WITH ANTENNA SHOWN

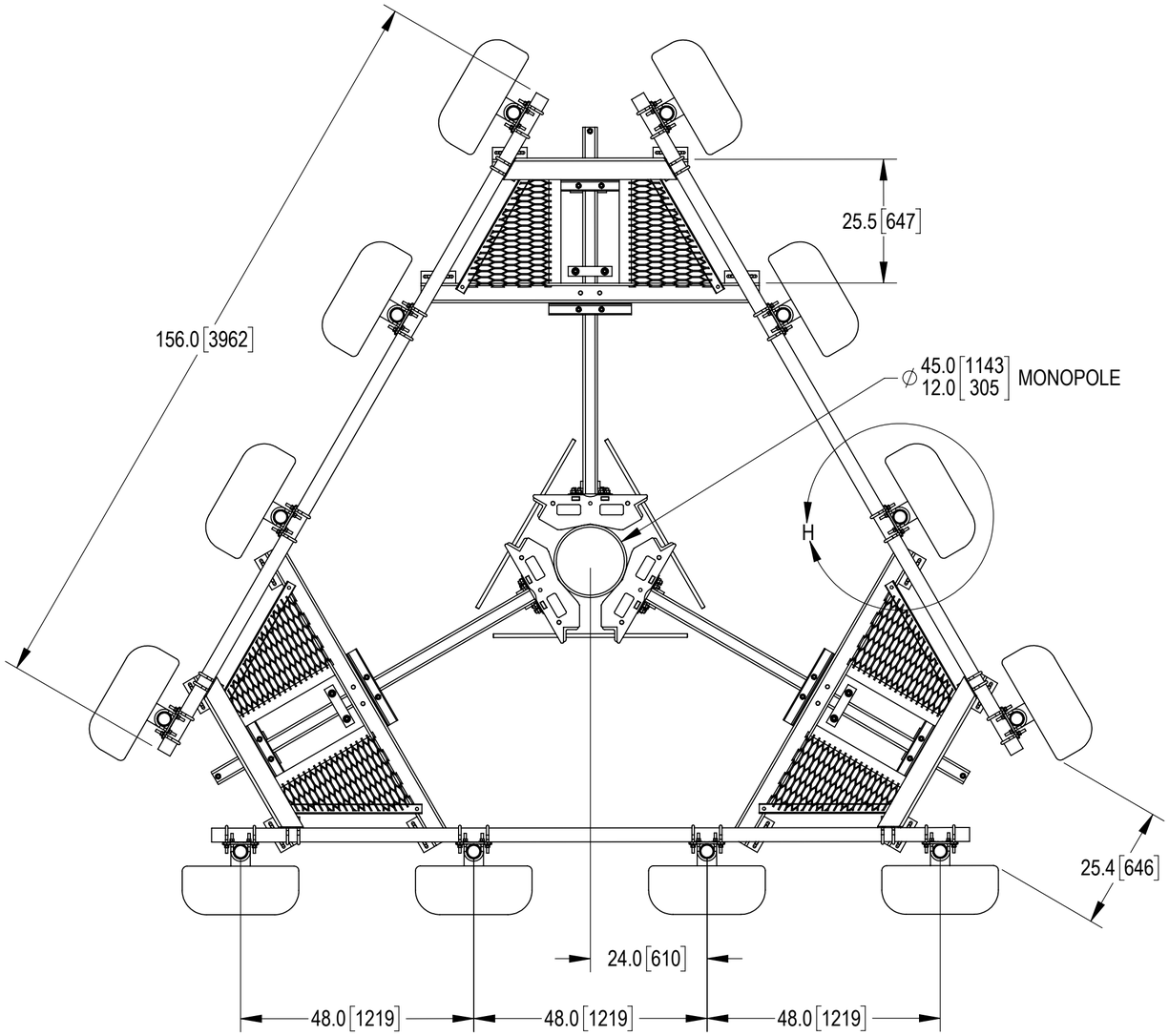

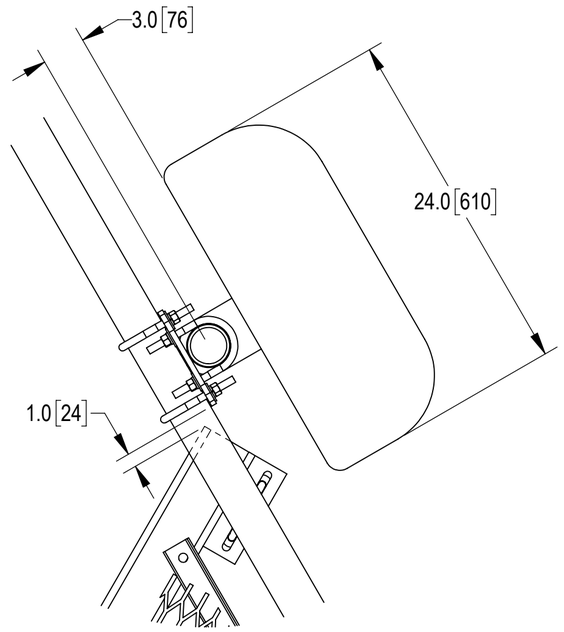

DETAIL H
SCALE 1 : 8

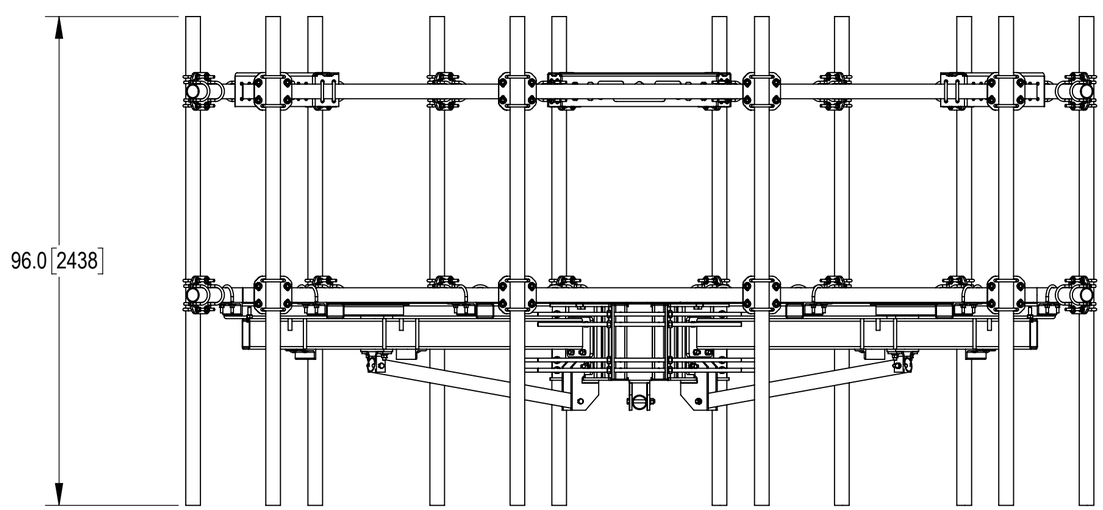

© 2023 CommScope, Inc. Confidential

COMMSCOPE, INC. OF NORTH CAROLINA				
TITLE				
SIZE C	SCALE 1:23	DOCUMENT NO.		
		DRAWING		SHEET
		VERSION	STATUS	REVISION	7 OF 16

COMPONENTS FOR INSTALLATION
MP-PP13M-12C-126 SHOWN

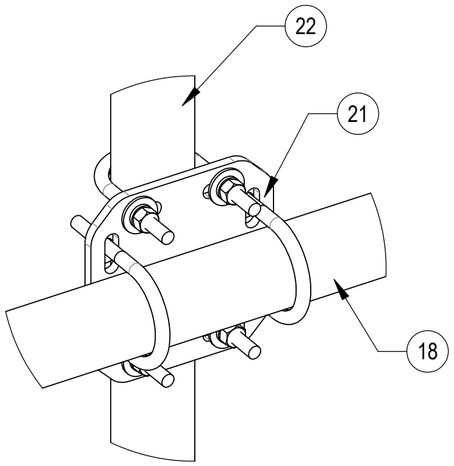

DETAIL J
SCALE 1 : 4

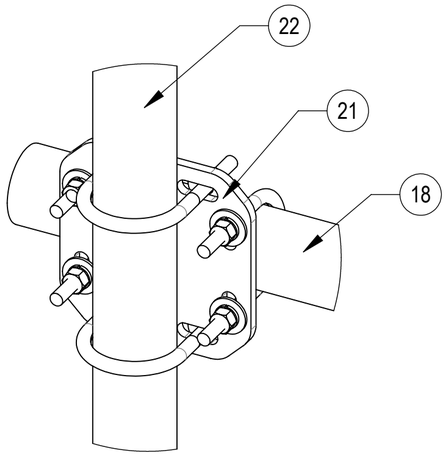

DETAIL K
SCALE 1 : 4

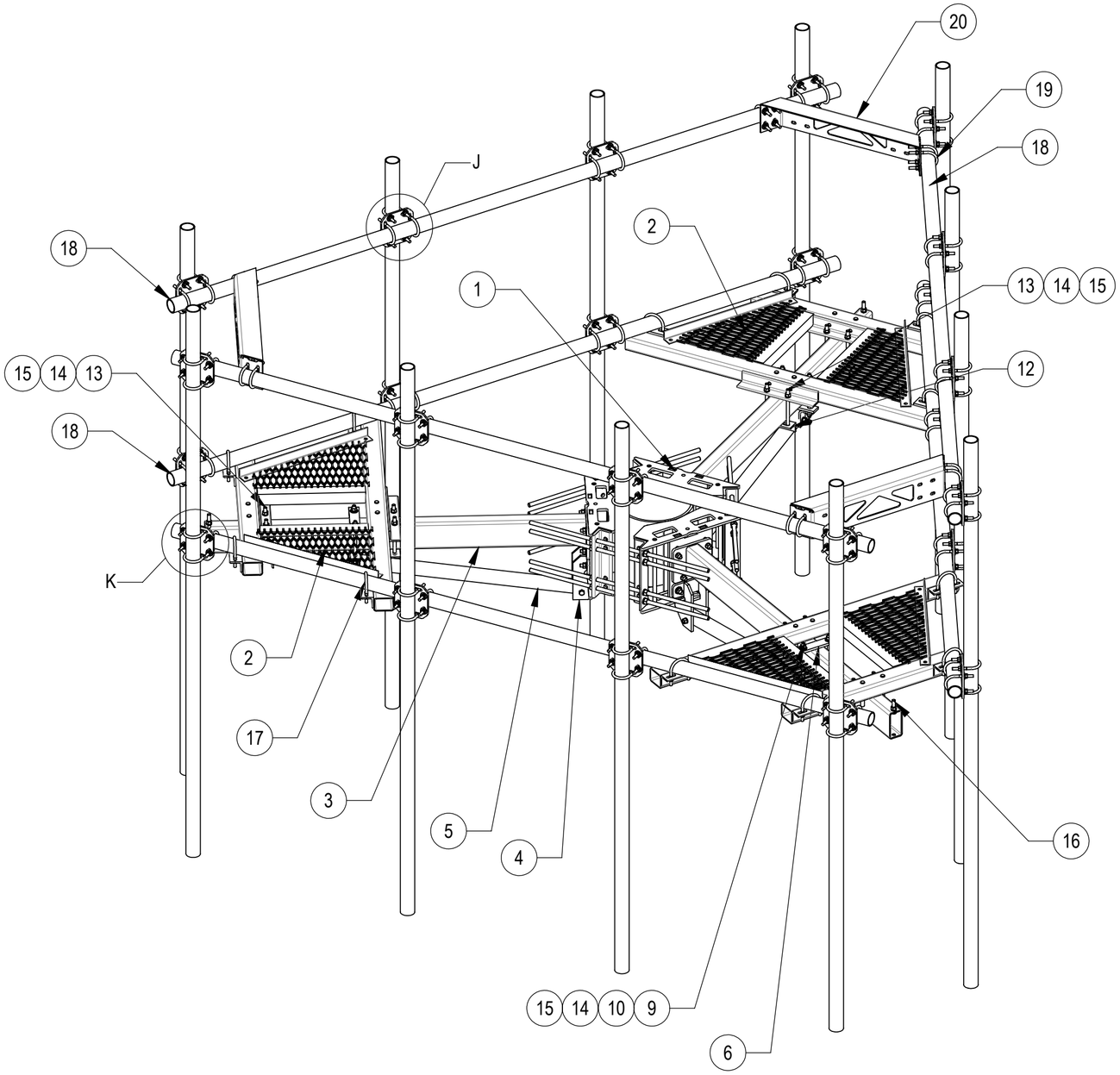

COMPONENT PART NUMBERS PROVIDED FOR ASSEMBLY PURPOSES;
INDIVIDUAL COMPONENTS MAY BE SHIPPED AS PARTS WITHIN AN INCLUDED KIT.

ITEM NO.	PART NUMBER	DESCRIPTION	QTY.	WEIGHT
1	MC-RMHD-1245-3	3 SECTOR RING MOUNT, 12"-45" POLE	1	329.19 LBS
2	MC-AS-4000-00	WELDMENT, CO-LOCATION PLATFORM DECK	3	135.19 LBS
3	MC-AS-5000	WELDMENT, MONO PLATF SPINDLE	3	97.84 LBS
4	MC-AS-6100	WELDMENT, MINI KICKER BRACKET	3	16.47 LBS
5	RK48	KICKER ARM SUPPORT TUBE , 36"	3	21.39 LBS
6	MTC323704	CLAMP BAR	6	2.37 LBS
7	RK02	CONNECTION BRACKET	6	1.21 LBS
8	GB-0550A	5/8" X 5" GALV BOLT KIT (A325)	6	0.52 LBS
9	MT-381-10	5/8" X 10" GALV THREADED ROD	6	0.86 LBS
10	SWF-05	5/8" SST, FLATWASHER 18-8, .687X1.5X.0.078	30	0.04 LBS
11	GB-0524A	5/8" X 2-1/2" GALV HEX BOLT (A325)	18	0.31 LBS
12	MC-AS-6000	ANGLE, CO-LOCATION PLATFORM CLAMP	6	2.60 LBS
13	9615-14	BOLT,CARRIAGE,5/8-11,8.5,STL GALV	12	0.11 LBS
14	GWL-05	5/8" GALV LOCK WASHER	24	0.03 LBS
15	GN-05	5/8" GALV HEX NUT	24	0.08 LBS
16	GB-05245	5/8" X 2-1/2" GALV BOLT KIT	3	0.30 LBS
17	GUB-4355	1/2" X 3-5/8" X 5" GALV U-BOLT	12	0.71 LBS
18	MT546156	2.875" O.D. X 156" PIPE	6	75.58 LBS
19	GUB-4352	1/2" X 3" X 5-1/4" GALV U-BOLT	12	0.71 LBS
20	MC-AS-6200-00	CONNER WELDMEMT, HANDRAIL	3	23.91 LBS
21	XP-2525	CROSSOVER PLATE KIT, 2-7/8 OD X 2-7/8 OD	24	8.37 LBS
22	MT-546-126	PIPE, 2.875"OD X 126"	12	61.05 LBS

© 2023 CommScope, Inc. Confidential

COMMSCOPE, INC. OF NORTH CAROLINA

TITLE

SIZE	SCALE	DOCUMENT NO.
C	1:20	

DRAWING			SHEET
VERSION	STATUS	REVISION	8 OF 16

MP-PP13M-12C-126 WITH ANTENNA SHOWN

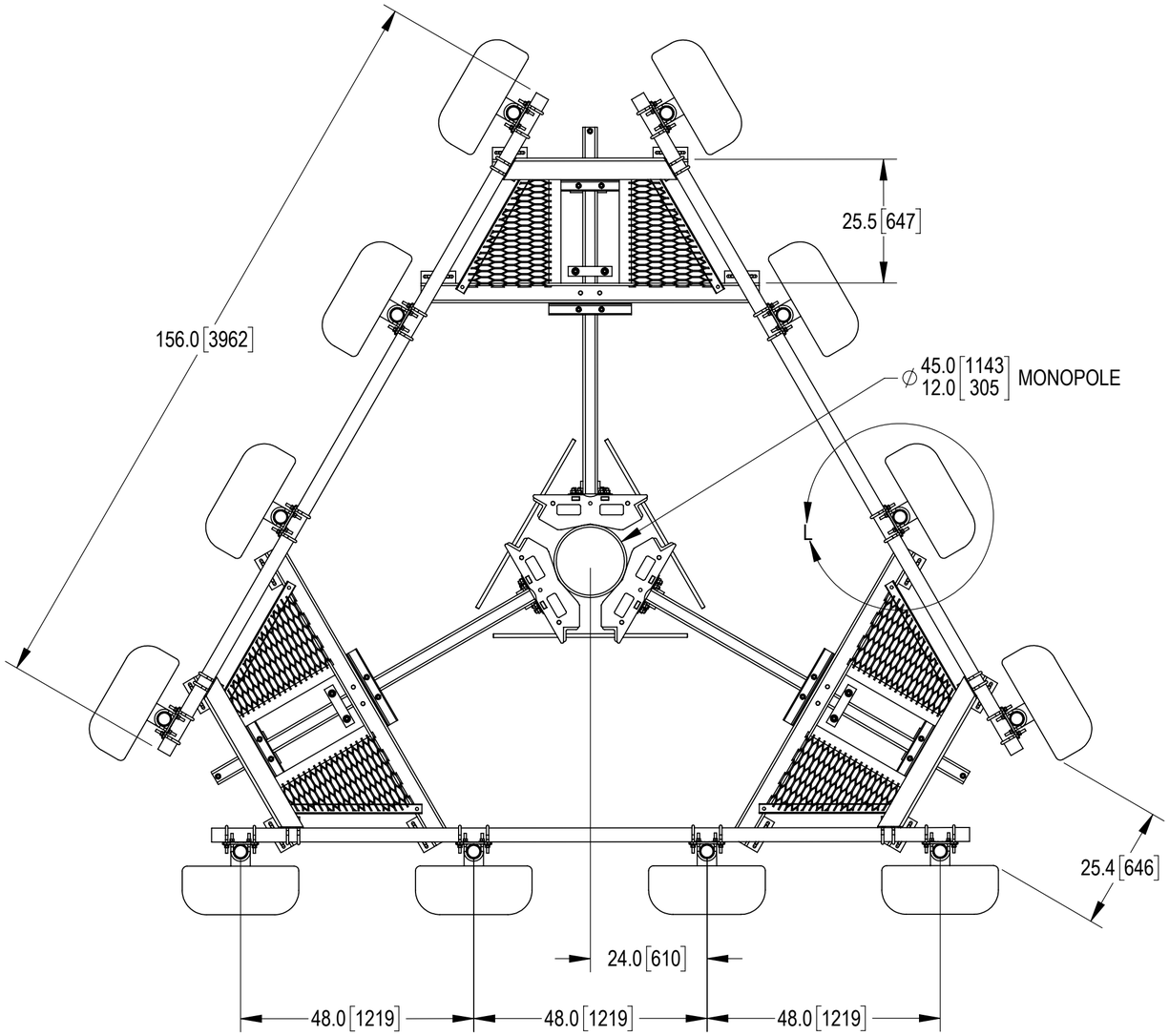

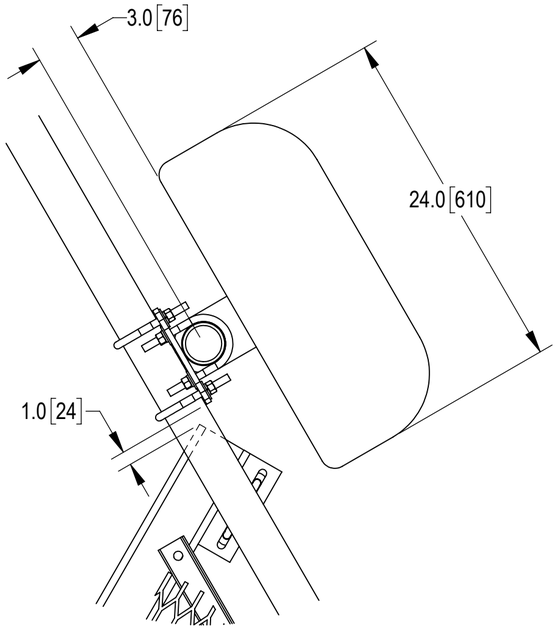

DETAIL L
SCALE 1 : 8

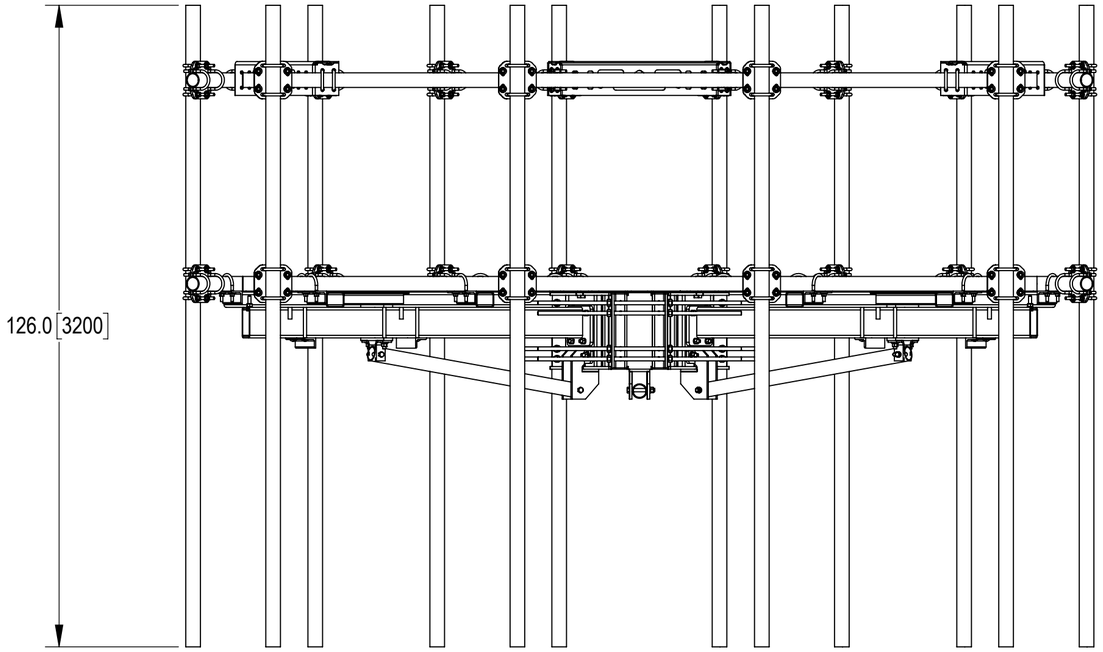

© 2023 CommScope, Inc. Confidential

COMMSCOPE, INC. OF NORTH CAROLINA					
TITLE					
SIZE C	SCALE 1:23	DOCUMENT NO.			
		DRAWING			SHEET
		VERSION	STATUS	REVISION	9 OF 16

COMPONENTS FOR INSTALLATION
MP-PP15M-12C-B SHOWN

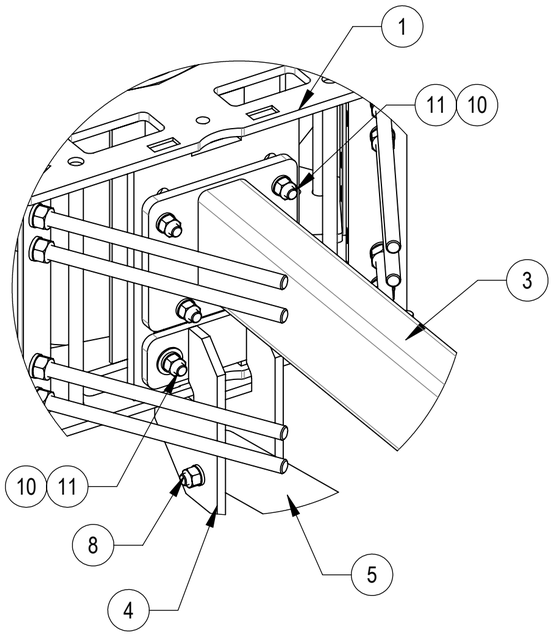

DETAIL M
SCALE 1 : 6

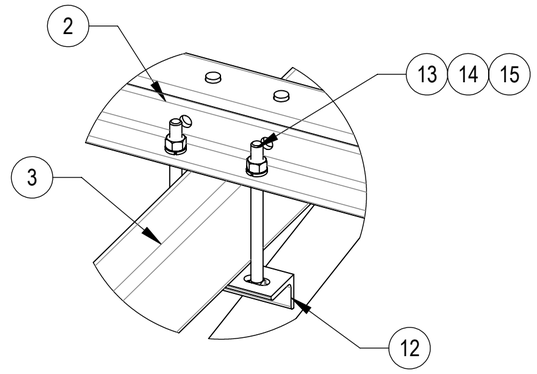

DETAIL N
SCALE 1 : 6

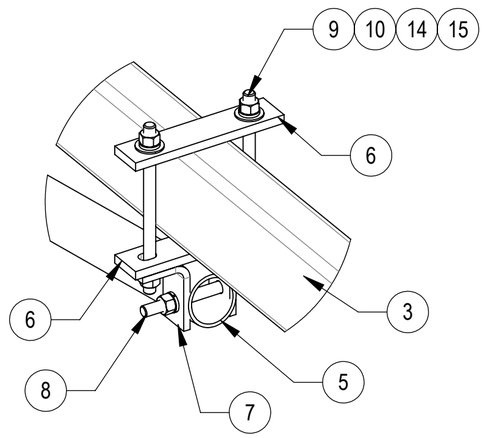

DETAIL N
SCALE 1 : 6

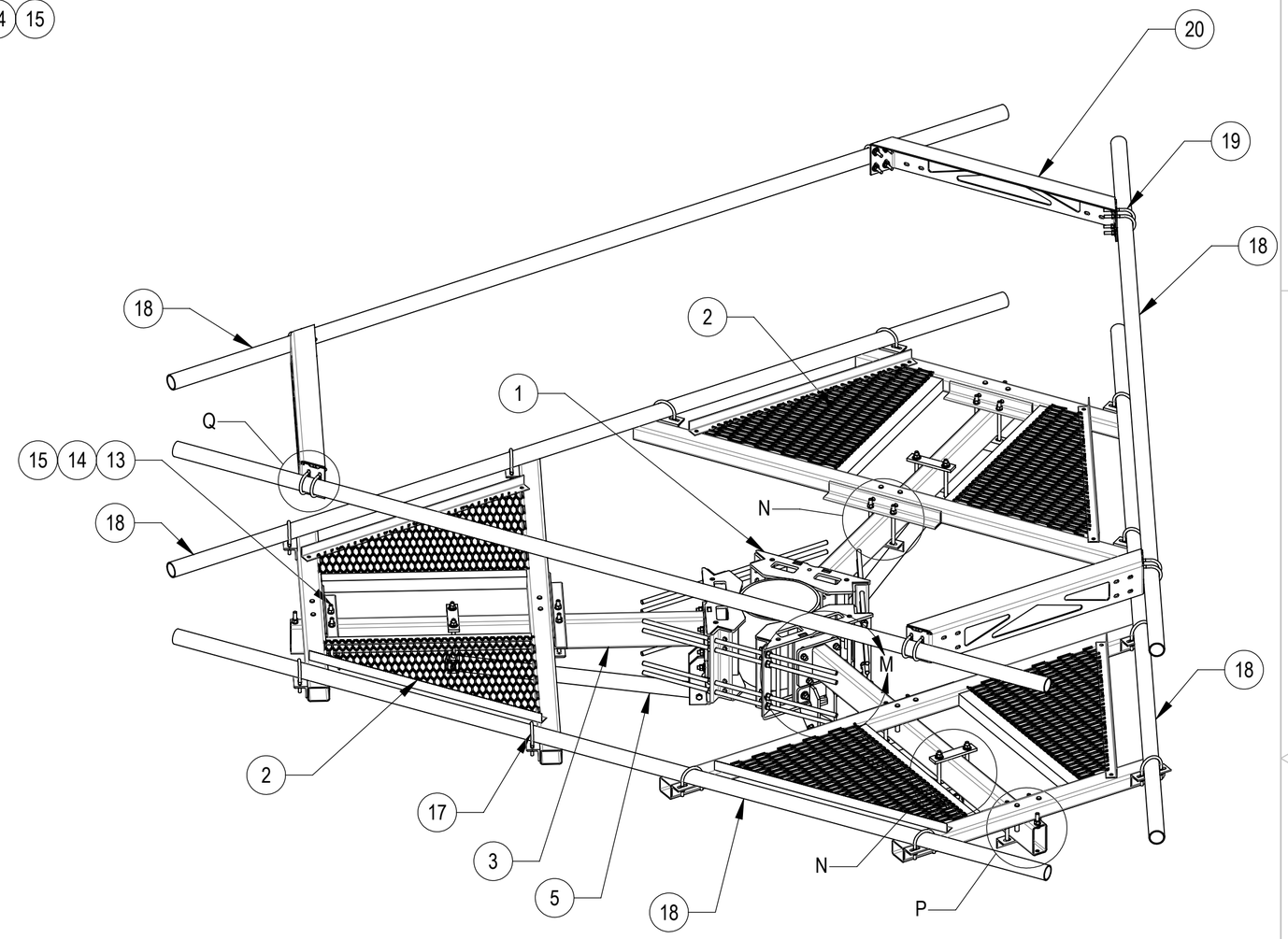

COMPONENT PART NUMBERS PROVIDED FOR ASSEMBLY PURPOSES;
INDIVIDUAL COMPONENTS MAY BE SHIPPED AS PARTS WITHIN AN INCLUDED KIT.

ITEM NO.	PART NUMBER	DESCRIPTION	QTY.	WEIGHT
1	MC-RMHD-1245-3	3 SECTOR RING MOUNT, 12"-45" POLE	1	329.19 LBS
2	MC-AS-7000-00	WELDMENT, CO-LOCATION PLATFORM DECK	3	208.06 LBS
3	MC-AS-5000	WELDMENT, MONO PLATF SPINDLE	3	97.84 LBS
4	MC-AS-6100	WELDMENT, MINI KICKER BRACKET	3	16.47 LBS
5	RK48	KICKER ARM SUPPORT TUBE , 36"	3	21.39 LBS
6	MTC323704	CLAMP BAR	6	2.37 LBS
7	RK02	CONNECTION BRACKET	6	1.21 LBS
8	GB-0550A	5/8" X 5" GALV BOLT KIT (A325)	6	0.52 LBS
9	MT-381-10	5/8" X 10" GALV THREADED ROD	6	0.86 LBS
10	SWF-05	5/8" SST, FLATWASHER 18-8, .687X1.5X.0.078	30	0.04 LBS
11	GB-0524A	5/8" X 2-1/2" GALV HEX BOLT (A325)	18	0.31 LBS
12	MC-AS-6000	ANGLE, CO-LOCATION PLATFORM CLAMP	6	2.60 LBS
13	9615-14	BOLT,CARRIAGE,5/8-11,8.5,STL GALV	12	0.11 LBS
14	GWL-05	5/8" GALV LOCK WASHER	24	0.03 LBS
15	GN-05	5/8" GALV HEX NUT	24	0.08 LBS
16	GB-05245	5/8" X 2-1/2" GALV BOLT KIT	3	0.30 LBS
17	GUB-4355	1/2" X 3-5/8" X 5" GALV U-BOLT	12	0.71 LBS
18	MT546180	2.875" O.D. X 180" PIPE	6	87.21 LBS
19	GUB-4352	1/2" X 3" X 5-1/4" GALV U-BOLT	12	0.71 LBS
20	MC-AS-6300-00	CONNER WELDMEMT, HANDRAIL	3	31.87 LBS

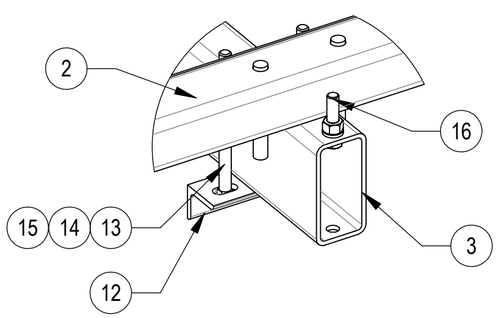

DETAIL P
SCALE 1 : 6

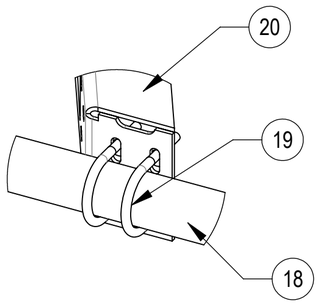

DETAIL Q
SCALE 1 : 6

© 2023 CommScope, Inc. Confidential

COMMSCOPE, INC. OF NORTH CAROLINA

TITLE

SIZE	SCALE	DOCUMENT NO.
C	1:20	

DRAWING			SHEET
VERSION	STATUS	REVISION	10 OF 16

COMPONENTS FOR INSTALLATION
MP-PP15M-12C-96 SHOWN

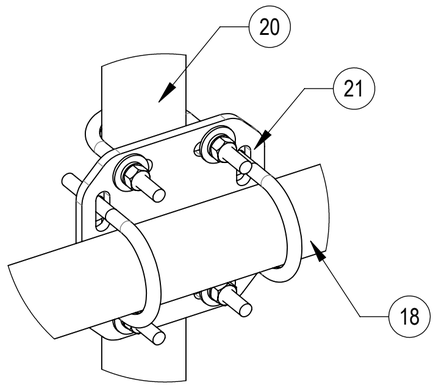

DETAIL R
SCALE 1 : 4

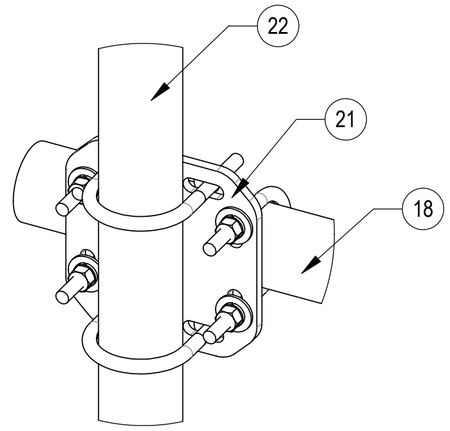

DETAIL Q
SCALE 1 : 4

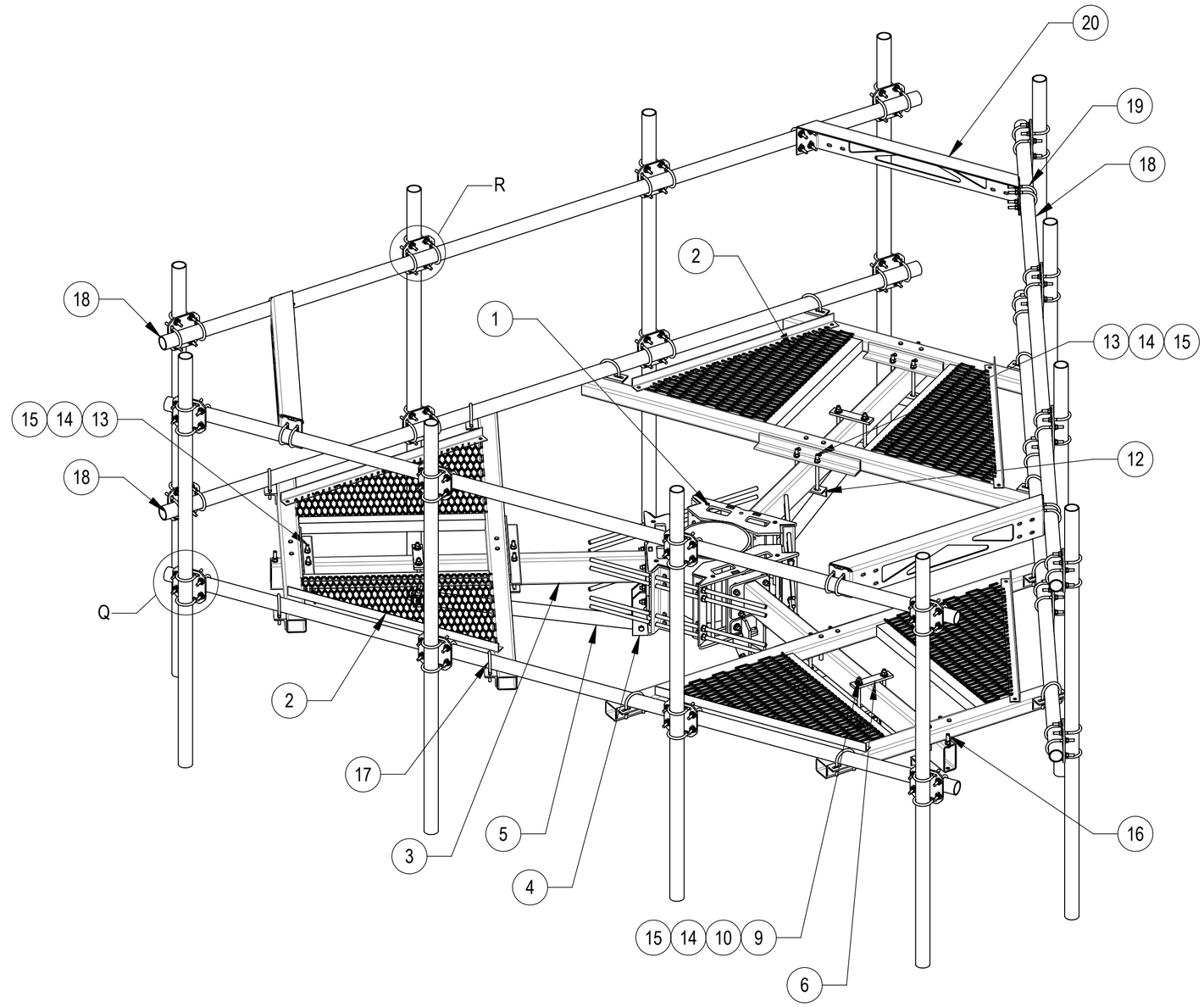

COMPONENT PART NUMBERS PROVIDED FOR ASSEMBLY PURPOSES;
INDIVIDUAL COMPONENTS MAY BE SHIPPED AS PARTS WITHIN AN INCLUDED KIT.

ITEM NO.	PART NUMBER	DESCRIPTION	QTY.	WEIGHT
1	MC-RMHD-1245-3	3 SECTOR RING MOUNT, 12"-45" POLE	1	329.19 LBS
2	MC-AS-7000-00	WELDMENT, CO-LOCATION PLATFORM DECK	3	208.06 LBS
3	MC-AS-5000	WELDMENT, MONO PLATF SPINDLE	3	97.84 LBS
4	MC-AS-6100	WELDMENT, MINI KICKER BRACKET	3	16.47 LBS
5	RK48	KICKER ARM SUPPORT TUBE , 36"	3	21.39 LBS
6	MTC323704	CLAMP BAR	6	2.37 LBS
7	RK02	CONNECTION BRACKET	6	1.21 LBS
8	GB-0550A	5/8" X 5" GALV BOLT KIT (A325)	6	0.52 LBS
9	MT-381-10	5/8" X 10" GALV THREADED ROD	6	0.86 LBS
10	SWF-05	5/8" SST, FLATWASHER 18-8, .687X1.5X.0.078	30	0.04 LBS
11	GB-0524A	5/8" X 2-1/2" GALV HEX BOLT (A325)	18	0.31 LBS
12	MC-AS-6000	ANGLE, CO-LOCATION PLATFORM CLAMP	6	2.60 LBS
13	9615-14	BOLT,CARRIAGE,5/8-11,8.5,STL GALV	12	0.11 LBS
14	GWL-05	5/8" GALV LOCK WASHER	24	0.03 LBS
15	GN-05	5/8" GALV HEX NUT	24	0.08 LBS
16	GB-05245	5/8" X 2-1/2" GALV BOLT KIT	3	0.30 LBS
17	GUB-4355	1/2" X 3-5/8" X 5" GALV U-BOLT	12	0.71 LBS
18	MT546180	2.875" O.D. X 180" PIPE	6	87.21 LBS
19	GUB-4352	1/2" X 3" X 5-1/4" GALV U-BOLT	12	0.71 LBS
20	MC-AS-6300-00	CONNER WELDMEMT, HANDRAIL	3	31.87 LBS
21	XP-2525	CROSSOVER PLATE KIT, 2-7/8 OD X 2-7/8 OD	24	8.37 LBS
22	MT54696	PIPE, 2.875"OD X 96"	12	45.96 LBS

© 2023 CommScope, Inc. Confidential

COMMSCOPE, INC. OF NORTH CAROLINA

TITLE

SIZE	SCALE	DOCUMENT NO.
C	1:20	

DRAWING			SHEET
VERSION	STATUS	REVISION	
			11 OF 16

MP-PP15M-12C-96 WITH ANTENNA SHOWN

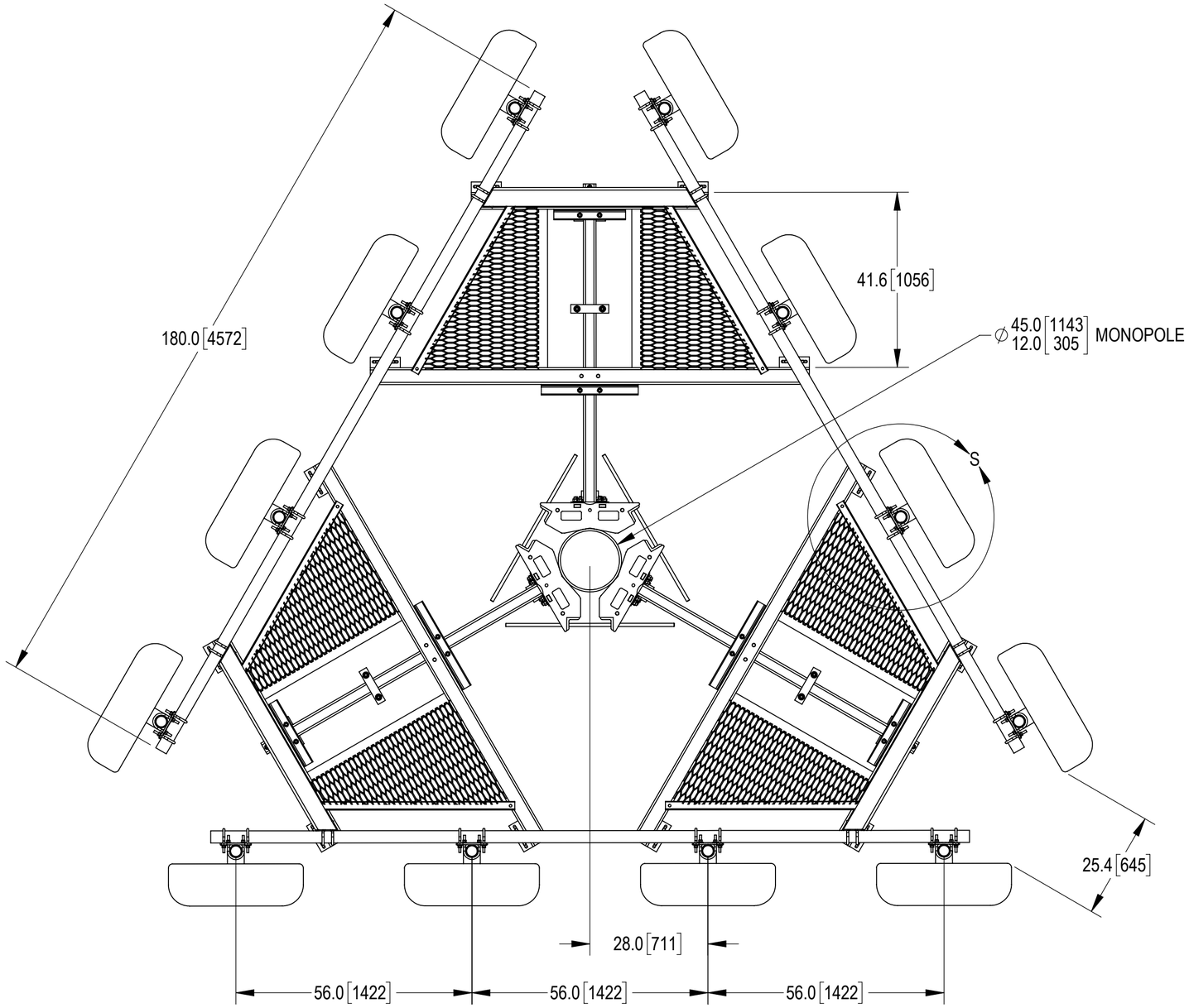

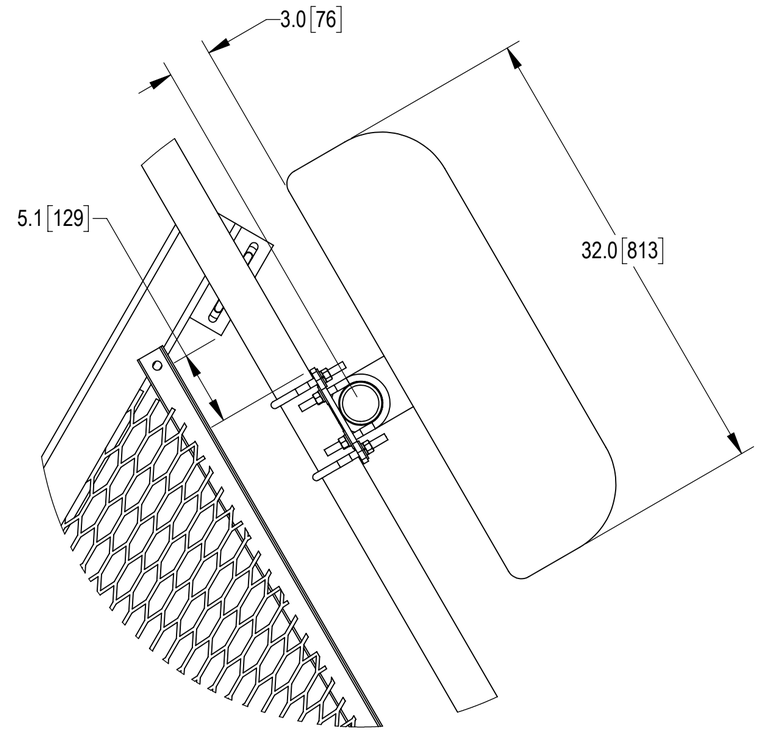

DETAIL S
SCALE 1 : 8

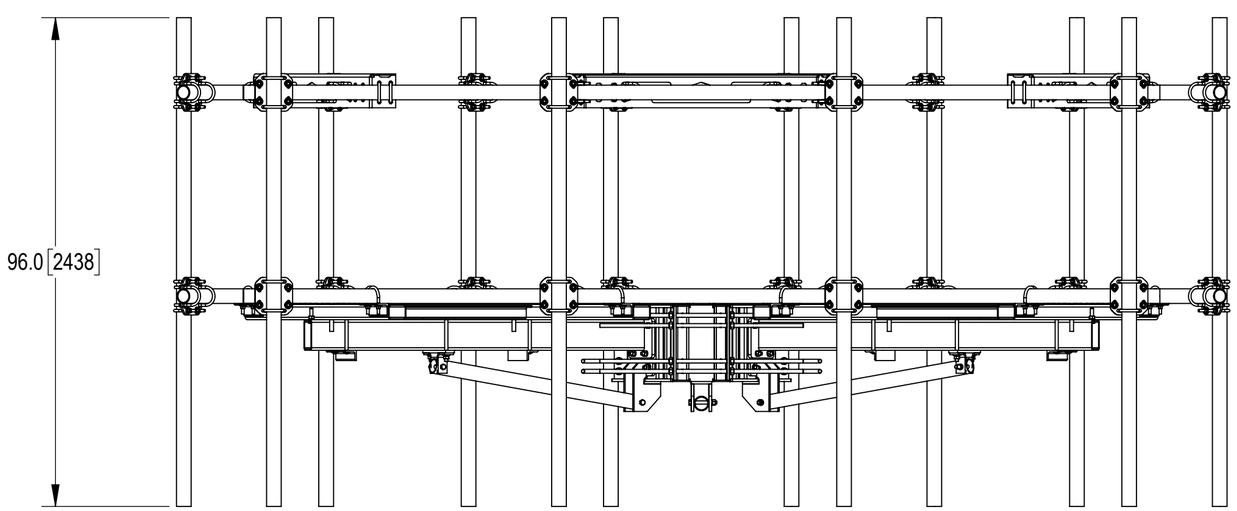

© 2023 CommScope, Inc. Confidential

COMMSCOPE, INC. OF NORTH CAROLINA				
TITLE				
SIZE C	SCALE 1:20	DOCUMENT NO.		
		DRAWING		SHEET
		VERSION	STATUS	REVISION	12 OF 16

COMPONENTS FOR INSTALLATION
MP-PP15M-12C-126 SHOWN

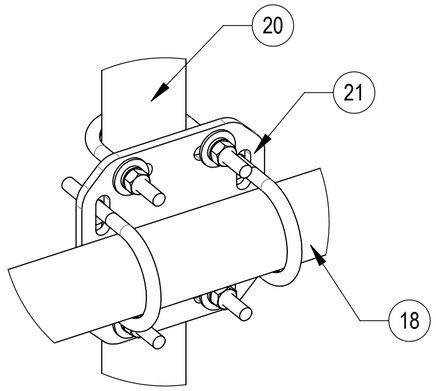

DETAIL T
SCALE 1 : 4

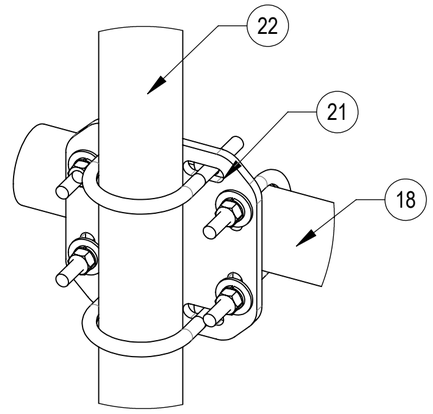

DETAIL U
SCALE 1 : 4

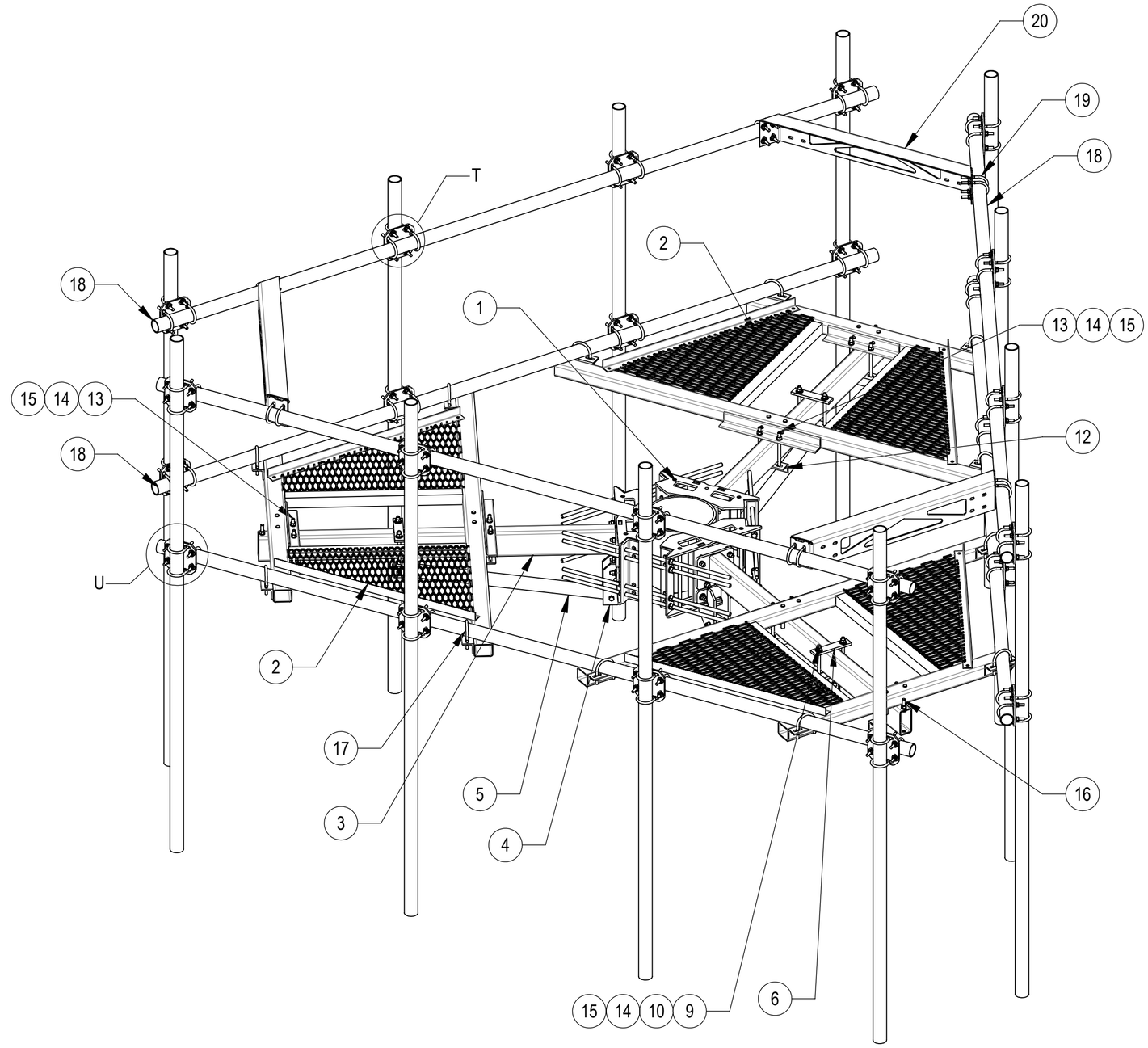

COMPONENT PART NUMBERS PROVIDED FOR ASSEMBLY PURPOSES;
INDIVIDUAL COMPONENTS MAY BE SHIPPED AS PARTS WITHIN AN INCLUDED KIT.

ITEM NO.	PART NUMBER	DESCRIPTION	QTY.	WEIGHT
1	MC-RMHD-1245-3	3 SECTOR RING MOUNT, 12"-45" POLE	1	329.19 LBS
2	MC-AS-7000-00	WELDMENT, CO-LOCATION PLATFORM DECK	3	208.06 LBS
3	MC-AS-5000	WELDMENT, MONO PLATF SPINDLE	3	97.84 LBS
4	MC-AS-6100	WELDMENT, MINI KICKER BRACKET	3	16.47 LBS
5	RK48	KICKER ARM SUPPORT TUBE , 36"	3	21.39 LBS
6	MTC323704	CLAMP BAR	6	2.37 LBS
7	RK02	CONNECTION BRACKET	6	1.21 LBS
8	GB-0550A	5/8" X 5" GALV BOLT KIT (A325)	6	0.52 LBS
9	MT-381-10	5/8" X 10" GALV THREADED ROD	6	0.86 LBS
10	SWF-05	5/8" SST, FLATWASHER 18-8, .687X1.5X.0.078	30	0.04 LBS
11	GB-0524A	5/8" X 2-1/2" GALV HEX BOLT (A325)	18	0.31 LBS
12	MC-AS-6000	ANGLE, CO-LOCATION PLATFORM CLAMP	6	2.60 LBS
13	9615-14	BOLT,CARRIAGE,5/8-11,8.5,STL GALV	12	0.11 LBS
14	GWL-05	5/8" GALV LOCK WASHER	24	0.03 LBS
15	GN-05	5/8" GALV HEX NUT	24	0.08 LBS
16	GB-05245	5/8" X 2-1/2" GALV BOLT KIT	3	0.30 LBS
17	GUB-4355	1/2" X 3-5/8" X 5" GALV U-BOLT	12	0.71 LBS
18	MT546180	2.875" O.D. X 180" PIPE	6	87.21 LBS
19	GUB-4352	1/2" X 3" X 5-1/4" GALV U-BOLT	12	0.71 LBS
20	MC-AS-6300-00	CONNER WELDMEMT, HANDRAIL	3	31.87 LBS
21	XP-2525	CROSSOVER PLATE KIT, 2-7/8 OD X 2-7/8 OD	24	8.37 LBS
22	MT-546-126	PIPE, 2.875"OD X 126"	12	61.05 LBS

© 2023 CommScope, Inc. Confidential

COMMSCOPE, INC. OF NORTH CAROLINA

TITLE

SIZE	SCALE	DOCUMENT NO.
C	1:20	

DRAWING			SHEET
VERSION	STATUS	REVISION	
			13 OF 16

MP-PP15M-12C-126 WITH ANTENNA SHOWN

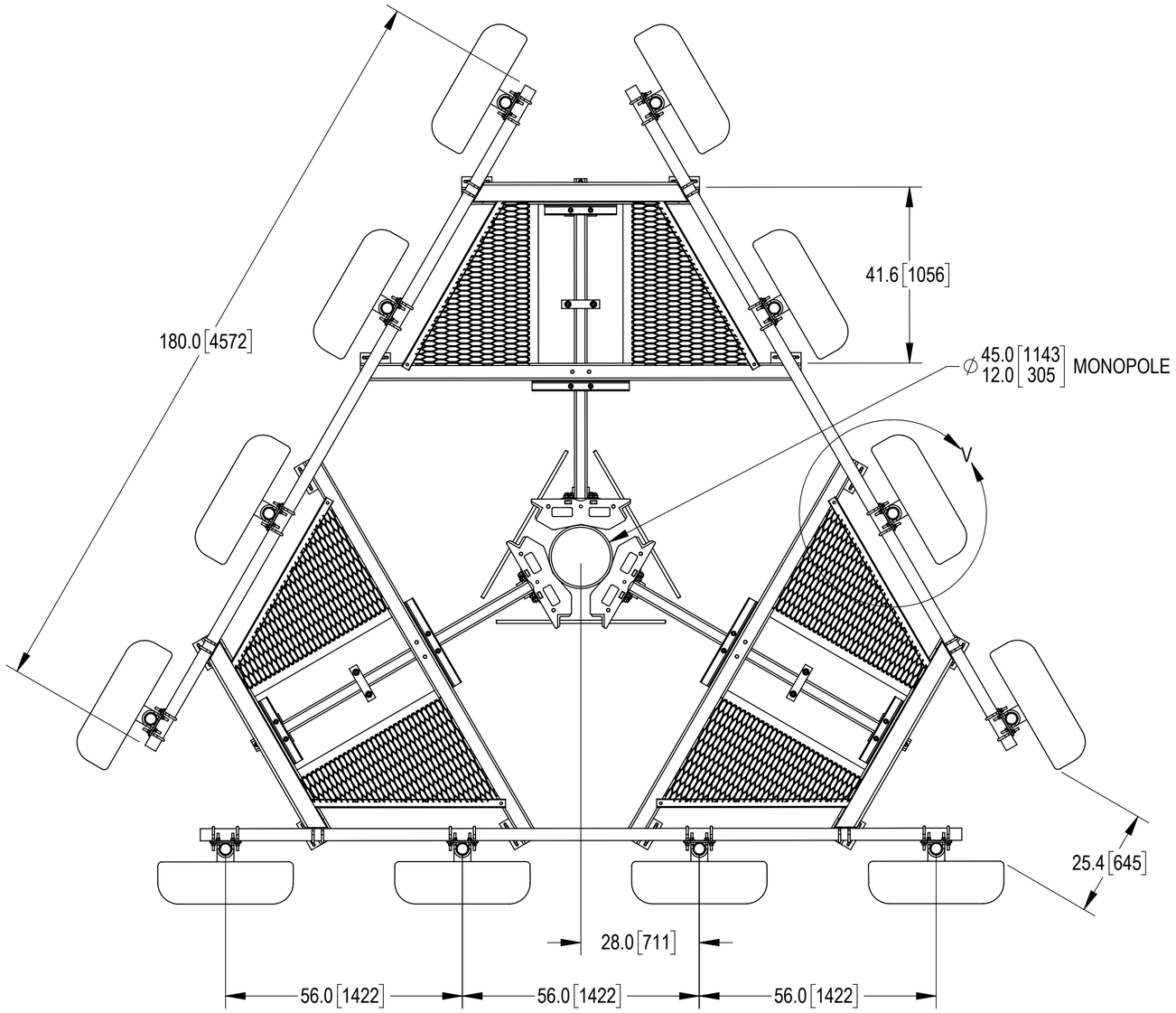

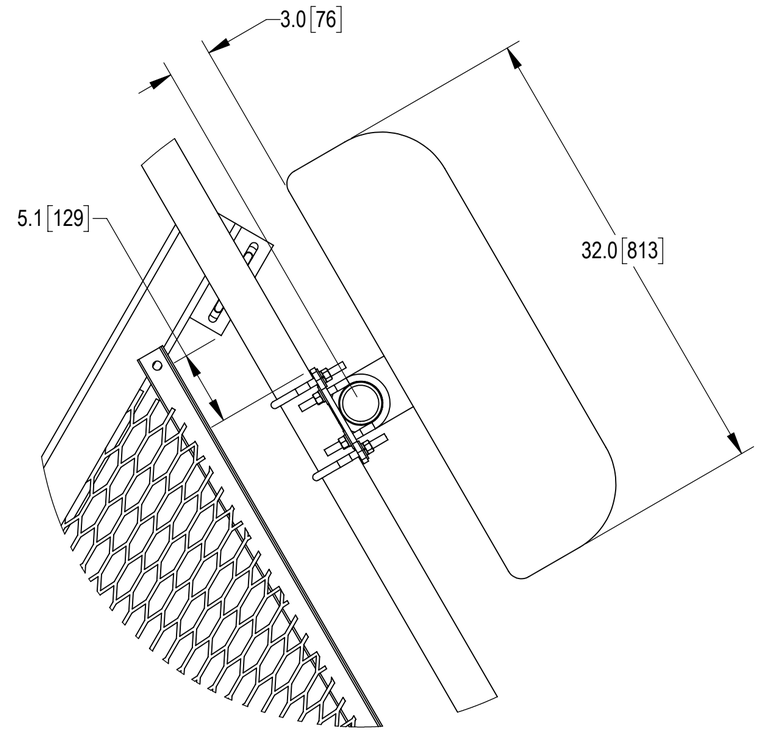

DETAIL V
SCALE 1 : 8

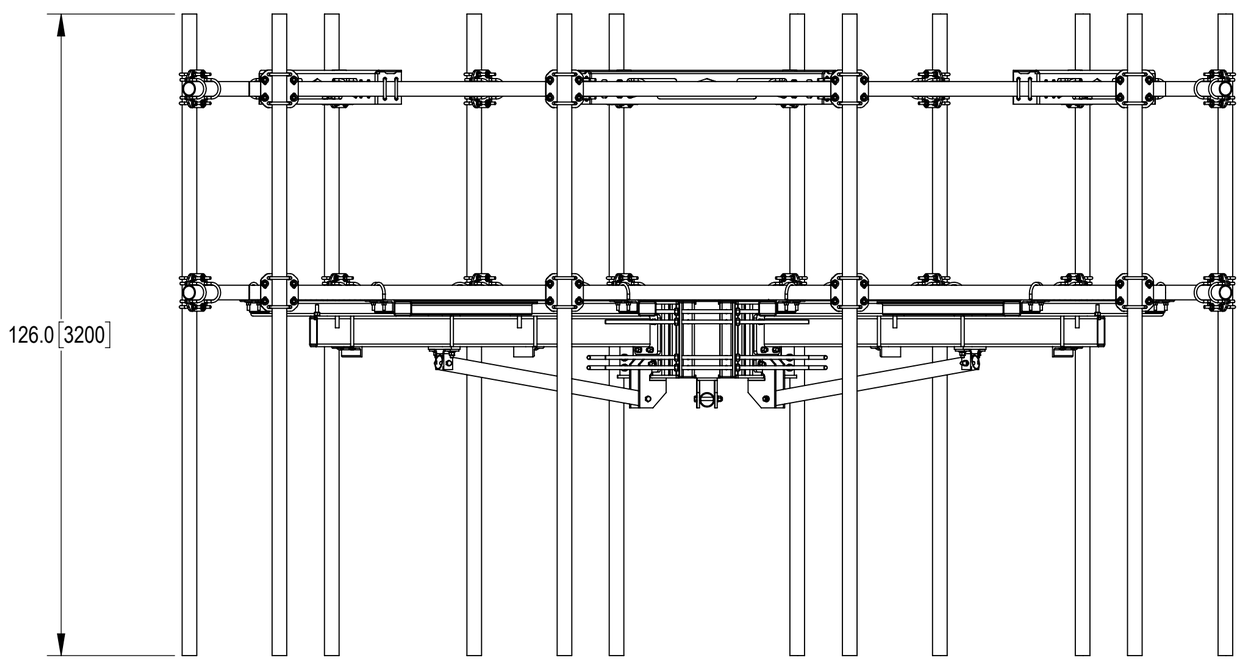

© 2023 CommScope, Inc. Confidential

COMMSCOPE, INC. OF NORTH CAROLINA			
TITLE			
SIZE C	SCALE 1:25	DOCUMENT NO.	
		DRAWING: VERSION / STATUS / REVISION	SHEET 14 OF 16

COMPONENTS FOR INSTALLATION
MP-PP15M-15C-126 SHOWN

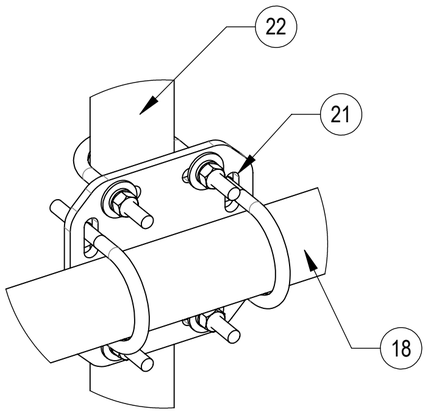

DETAIL W
SCALE 1 : 4

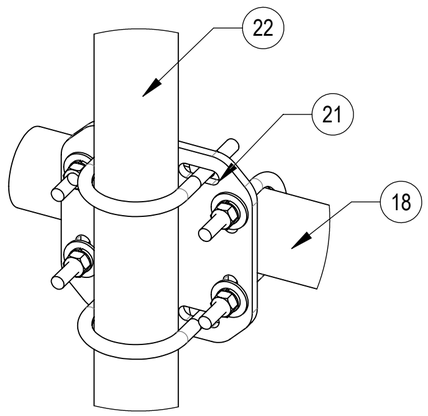

DETAIL Y
SCALE 1 : 4

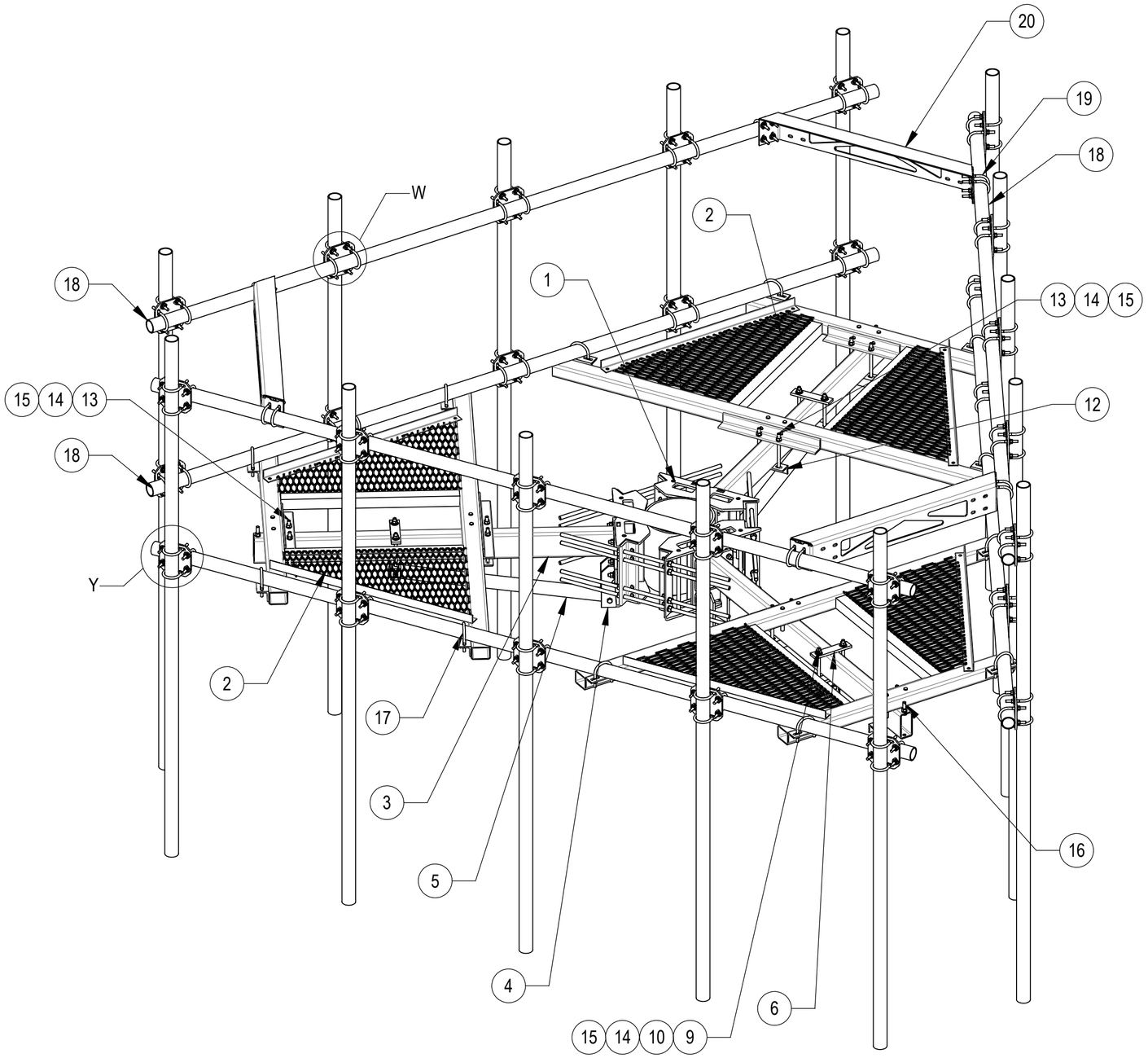

COMPONENT PART NUMBERS PROVIDED FOR ASSEMBLY PURPOSES;
INDIVIDUAL COMPONENTS MAY BE SHIPPED AS PARTS WITHIN AN INCLUDED KIT.

ITEM NO.	PART NUMBER	DESCRIPTION	QTY.	WEIGHT
1	MC-RMHD-1245-3	3 SECTOR RING MOUNT, 12"-45" POLE	1	329.19 LBS
2	MC-AS-7000-00	WELDMENT, CO-LOCATION PLATFORM DECK	3	208.06 LBS
3	MC-AS-5000	WELDMENT, MONO PLATF SPINDLE	3	97.84 LBS
4	MC-AS-6100	WELDMENT, MINI KICKER BRACKET	3	16.47 LBS
5	RK48	KICKER ARM SUPPORT TUBE , 36"	3	21.39 LBS
6	MTC323704	CLAMP BAR	6	2.37 LBS
7	RK02	CONNECTION BRACKET	6	1.21 LBS
8	GB-0550A	5/8" X 5" GALV BOLT KIT (A325)	6	0.52 LBS
9	MT-381-10	5/8" X 10" GALV THREADED ROD	6	0.86 LBS
10	SWF-05	5/8" SST, FLATWASHER 18-8, .687X1.5X.0.078	30	0.04 LBS
11	GB-0524A	5/8" X 2-1/2" GALV HEX BOLT (A325)	18	0.31 LBS
12	MC-AS-6000	ANGLE, CO-LOCATION PLATFORM CLAMP	6	2.60 LBS
13	9615-14	BOLT,CARRIAGE,5/8-11,8.5,STL GALV	12	0.11 LBS
14	GWL-05	5/8" GALV LOCK WASHER	24	0.03 LBS
15	GN-05	5/8" GALV HEX NUT	24	0.08 LBS
16	GB-05245	5/8" X 2-1/2" GALV BOLT KIT	3	0.30 LBS
17	GUB-4355	1/2" X 3-5/8" X 5" GALV U-BOLT	12	0.71 LBS
18	MT546180	2.875" O.D. X 180" PIPE	6	87.21 LBS
19	GUB-4352	1/2" X 3" X 5-1/4" GALV U-BOLT	12	0.71 LBS
20	MC-AS-6300-00	CONNER WELDMEMT, HANDRAIL	3	31.87 LBS
21	XP-2525	CROSSOVER PLATE KIT, 2-7/8 OD X 2-7/8 OD	30	8.37 LBS
22	MT-546-126	PIPE, 2.875"OD X 126"	15	61.05 LBS

© 2023 CommScope, Inc. Confidential

COMMSCOPE, INC. OF NORTH CAROLINA

TITLE

SIZE	SCALE	DOCUMENT NO.
C	1:20	

DRAWING			SHEET
VERSION	STATUS	REVISION	
			15 OF 16

MP-PP15M-15C-126 WITH ANTENNA SHOWN

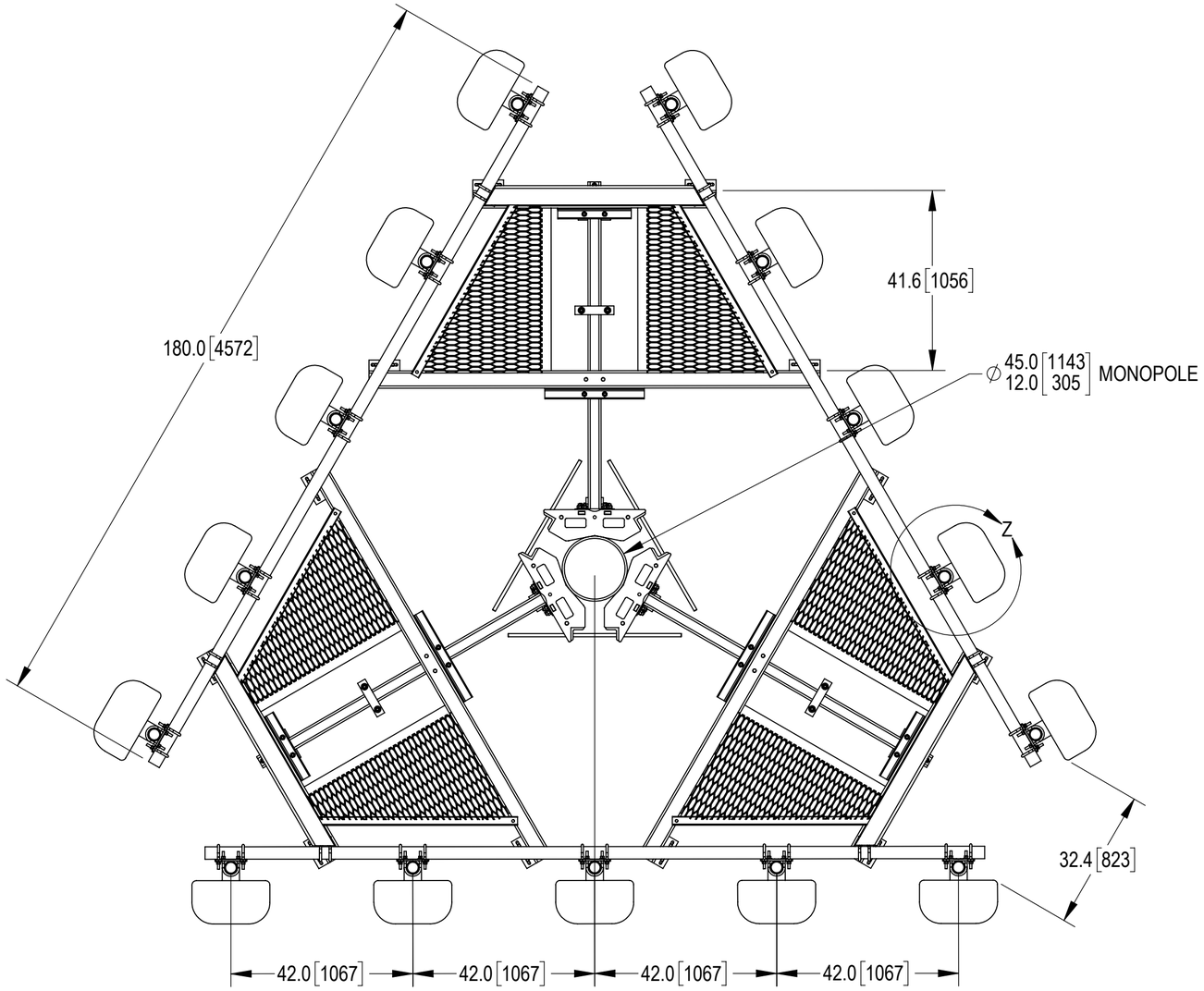

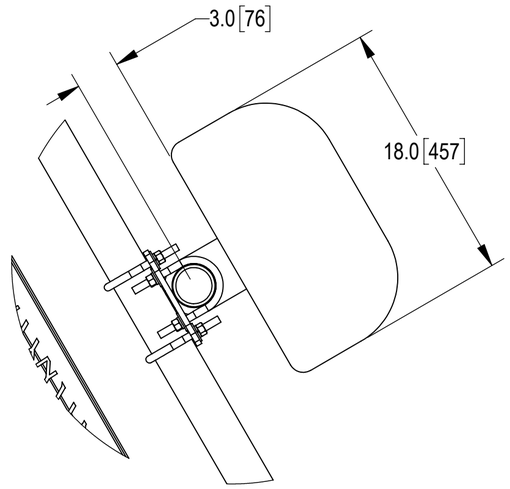

DETAIL Z
SCALE 1 : 8

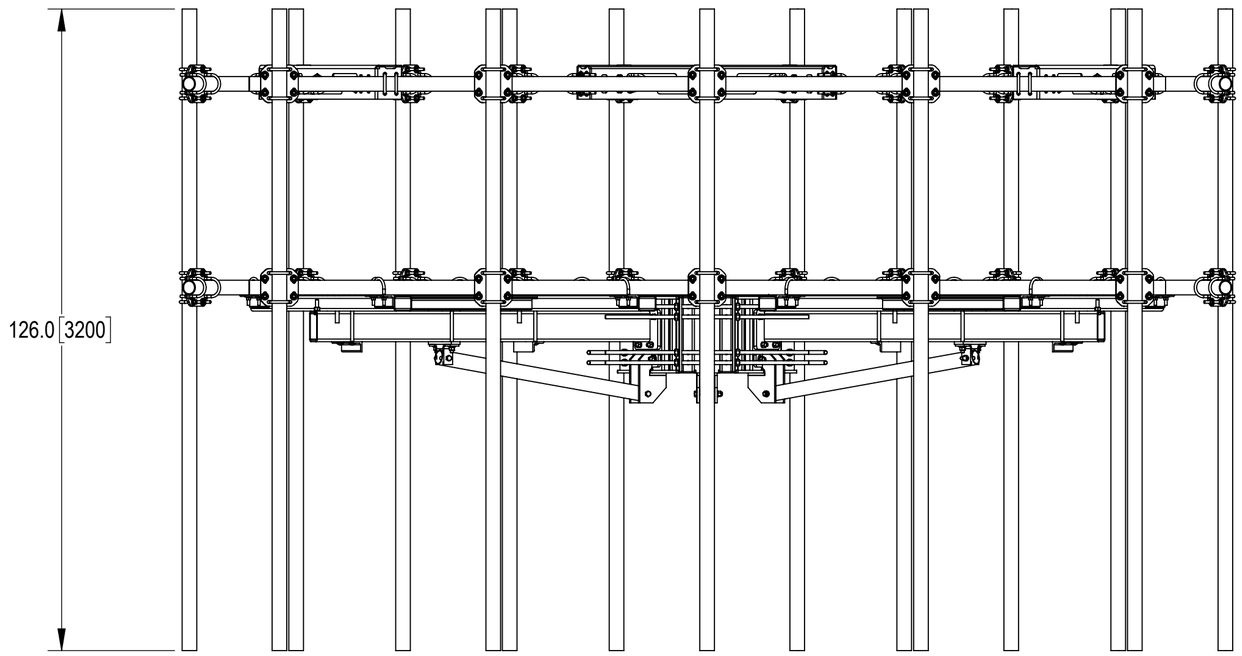

© 2023 CommScope, Inc. Confidential

COMMSCOPE, INC. OF NORTH CAROLINA				
TITLE				
SIZE C	SCALE 1:25	DOCUMENT NO.		
		DRAWING		SHEET
		VERSION	STATUS	REVISION	16 OF 16