243951

Mounting/Grounding Bracket

Product Classification

Product Type	Surge arrestor accessory
Ordering Note	CommScope® non-standard product

General Specifications

Interface	N Female Bulkhead

Dimensions

Height	67 mm | 2.638 in
Width	22.3 mm | 0.878 in
Length	89.9 mm | 3.539 in

Outline Drawing

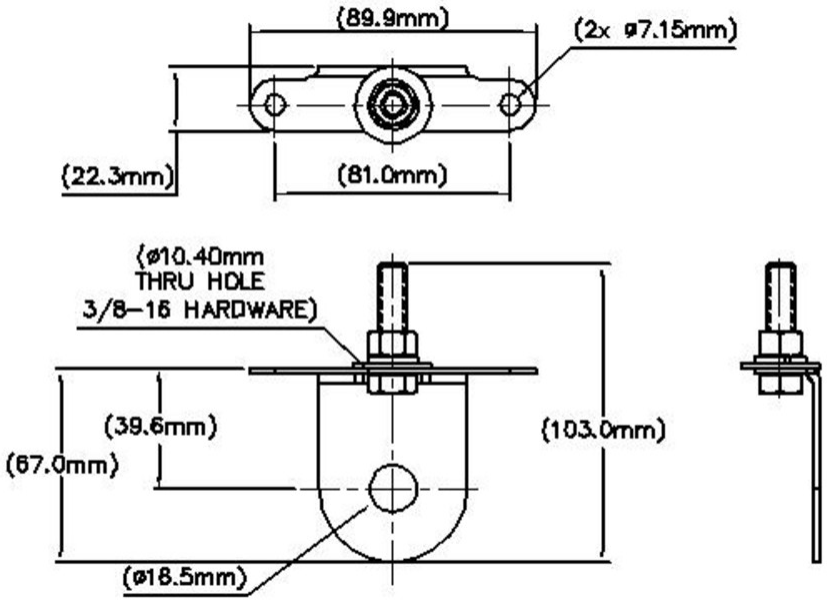

©2024 CommScope, Inc. All rights reserved. CommScope and the CommScope logo are registered trademarks of CommScope and/or its affiliates in the U.S. and other countries. For additional trademark information see https://www.commscope.com/trademarks. All product names, trademarks and registered trademarks are property of their respective owners. Revised: March 21, 2024

243951

Packaging and Weights

Packaging quantity	1
Weight, net	110 g | 0.243 lb

Regulatory Compliance/Certifications

Agency	Classification
CHINA-ROHS	Below maximum concentration value
ISO 9001:2015	Designed, manufactured and/or distributed under this quality management system
REACH-SVHC	Compliant as per SVHC revision on www.commscope.com/ProductCompliance
ROHS	Compliant
UK-ROHS	Compliant

©2024 CommScope, Inc. All rights reserved. CommScope and the CommScope logo are registered trademarks of CommScope and/or its affiliates in the U.S. and other countries. For additional trademark information see https://www.commscope.com/trademarks. All product names, trademarks and registered trademarks are property of their respective owners. Revised: March 21, 2024