MATERIAL	DESCRIPTION	WEIGHT (lbs)
760105478	CAP MPS, STRAIN RELIEF	

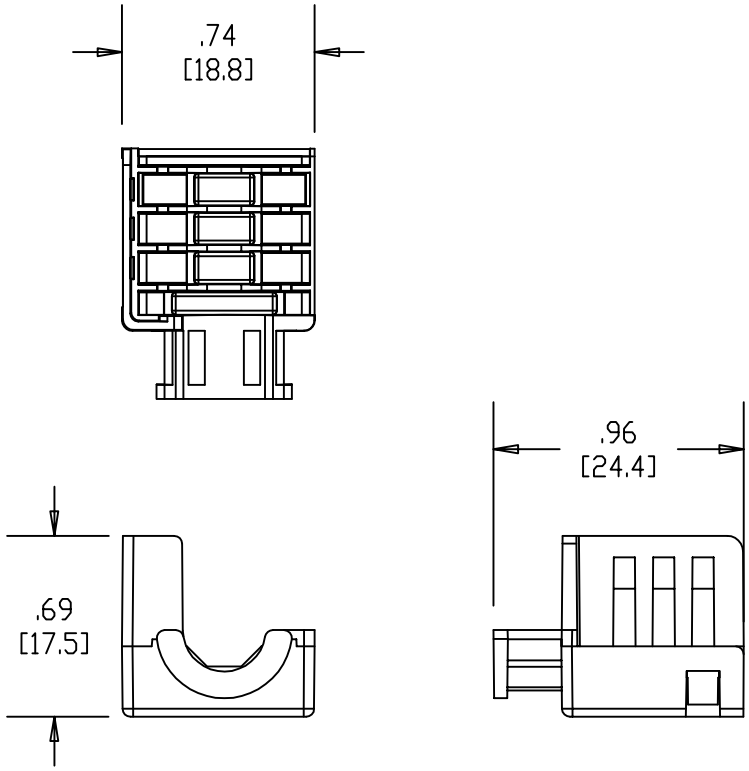

NOTES:

1. SEE SYSTIMAX CATALOG FOR PART NUMBER SUFFIXES TO INDICATE COLOR/PKG.
2. SEE SYSTIMAX CATALOG FOR COMPLETE LIST OF PARTS RELATED TO THE USE OF THIS PRODUCT.
3. DIMENSIONS IN PARENTHESES ARE IN METRIC.
4. PART INCLUDES:
   (10) COVER

CAP, MPS-CAP-10

COMMSCOPE, INC OF NORTH CAROLINA

SYSTIMAX® SOLUTIONS

REV	DATE	ECR	DESCRIPTION	BY
1	7/23/09		INITIAL ISSUE	XW

DRAWN BY TZ

DATE 7/23/09

DWG NO 760105478

© 2008CommScope, Inc. All Rights Reserved