DA-C200

Double Antenna Clamp

Product Classification

Product Type	Stand-off mount

General Specifications

Mounting	Round member, 38.1–88.9 mm (1-1/2 in to 3-1/2 in) OD

Dimensions

Height	50.8 mm | 2 in
Width	457.2 mm | 18 in
Length	177.8 mm | 7 in
Mounting Diameter, maximum	88.9 mm | 3.5 in
Mounting Diameter, minimum	38.1 mm | 1.5 in

©2024 CommScope, Inc. All rights reserved. CommScope and the CommScope logo are registered trademarks of CommScope and/or its affiliates in the U.S. and other countries. For additional trademark information see https://www.commscope.com/trademarks. All product names, trademarks and registered trademarks are property of their respective owners. Revised: August 15, 2024

DA-C200

Outline Drawing

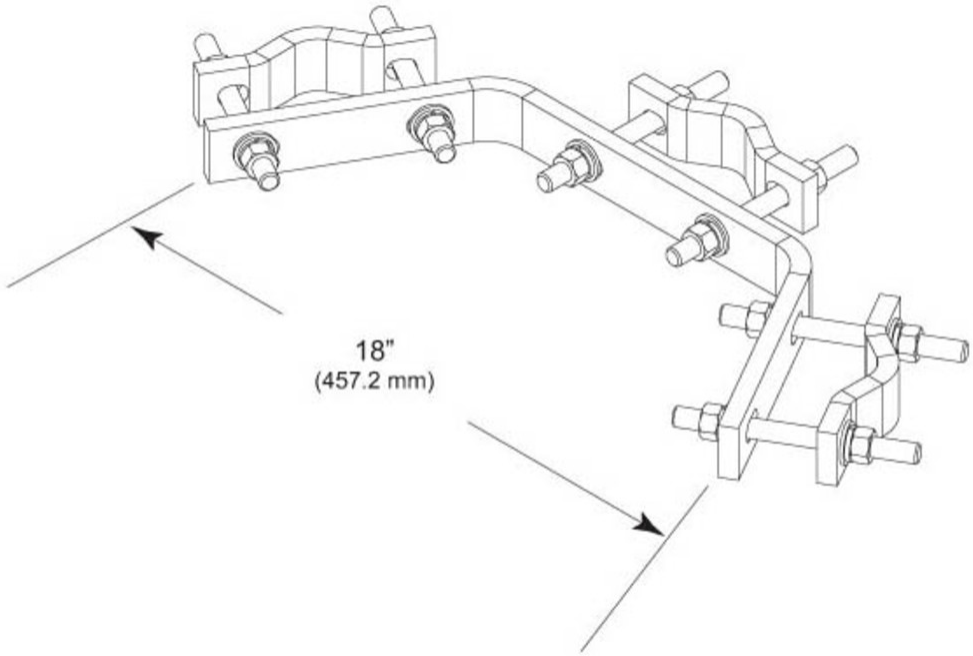

Material Specifications

Material Type	Hot dip galvanized steel

Packaging and Weights

Included	Clamp assembly
Packaging quantity	2
Weight, net	10.4 kg | 22.928 lb

Regulatory Compliance/Certifications

Agency	Classification
ISO 9001:2015	Designed, manufactured and/or distributed under this quality management system

©2024 CommScope, Inc. All rights reserved. CommScope and the CommScope logo are registered trademarks of CommScope and/or its affiliates in the U.S. and other countries. For additional trademark information see https://www.commscope.com/trademarks. All product names, trademarks and registered trademarks are property of their respective owners. Revised: August 15, 2024