1.0 GENERAL NOTES
1.1 ALL IMPERIAL DIMENSIONS ARE IN BRACKETS [X.XX]
2.0 DESIGN NOTES
3.0 MANUFACTURING/SPECIAL REQUIREMENTS
3.1 TIGHTEN ALL BOLTS SECURING FLAT PLATES BY THE TURN-OF-NUT METHOD. TIGHTEN ALL U-BOLTS USING TURN-OF-NUT METHOD WITH ATTENTION TO LEAVE EQUAL DISTANCE AND EQUAL FORCE ON EACH LEG OF THE U-BOLT.
4.0 TEST
5.0 PACKAGING
5.1 PACKAGING SHALL MEET COMMSCOPE REQUIRMENTS PER DOCUMENT IS-PL-3005

REVISIONS			
REV.	DESCRIPTION	DATE	APPROVED
A	INITIAL RELEASE	JYANG4 23SEP22	BA1025 40156827CMO

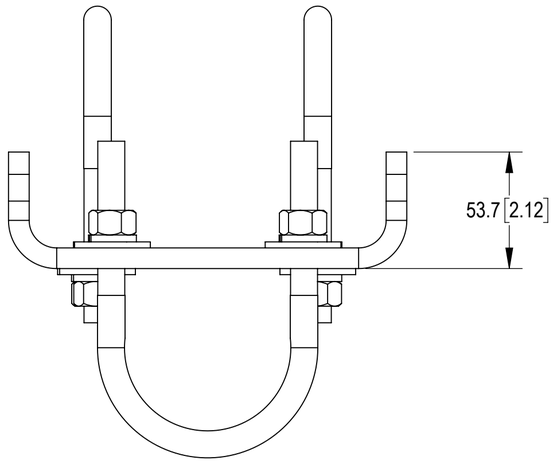

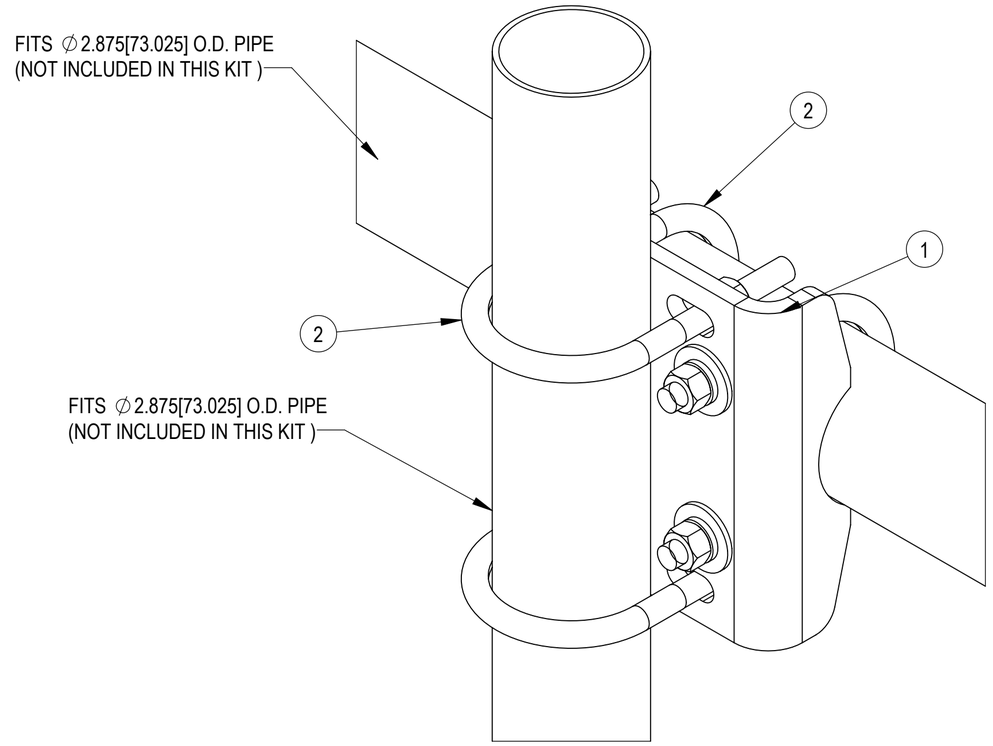

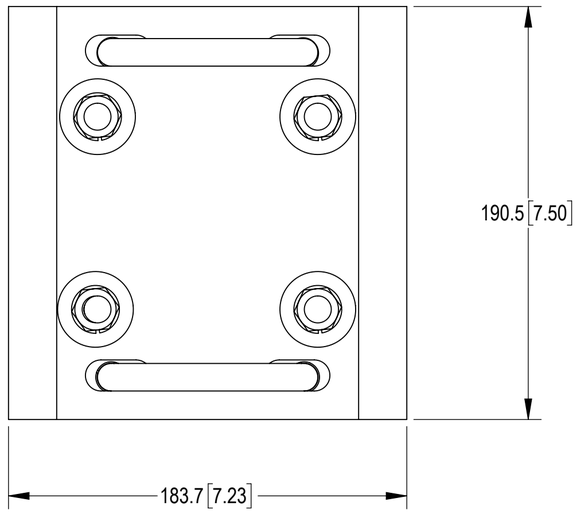

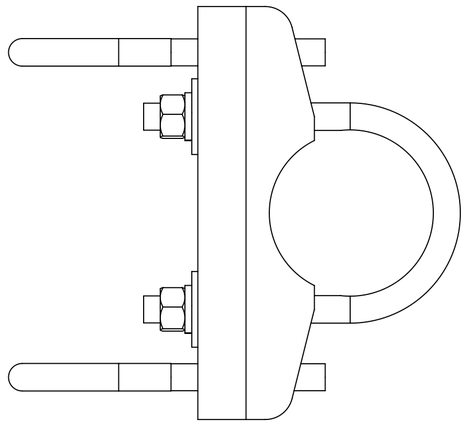

DENSITY		lbs/in³
MASS	10.59	lbs
VOLUME	37.56	in³
SURFACE AREA	291.09	in²
DENSITY		g/mm³
MASS	4812.5975	grams
VOLUME	615526.7243	mm³
SURFACE AREA	187801.7986	mm²
HEIGHT	183.7[7.23]	
LENGTH	(208.4[8.20])	
WIDTH	190.5[7.50]	

COMMSCOPE, INC. OF NORTH CAROLINA

TOLERANCES
0 PLACE X[.X] ± 6[0.25] 2 PLACE .XX[.XXX] ± 1.50[0.06]
1 PLACE .X[.XX] ± 3.0[0.12] ANGLES ± 2°

SAP MATERIAL MASTER
MT-219N-H

FINISH

MATERIAL

UNLESS OTHERWISE SPECIFIED DIMENSIONS ARE IN MILLIMETERS INTERPRET PER ANSI Y14.5M-1994

	NAME	DATE
CE	JYANG4	09/23/2022
RW	YMENG	09/28/2022
AD	BA1025	09/30/2022
RE	YMENG	09/30/2022

ECN 40156827CMO

TITLE
SADDLE PIPE MOUNTING KIT, 2-7/8" OD

SCALE 1:2

DOCUMENT NO. MT-219N-H

SIZE A2

Auth Group INSL

MODEL			DRAWING			SHEET
VERSION	STATUS	REVISION	VERSION	STATUS	REVISION	
00	RE	A	00	RE	A	1 OF 1

© 2022 CommScope, Inc. Confidential